Summary of Thesis submitted for PhD Degree

by John Leonard William Beckford

on

The Viable System Model: A More Adequate tool for Practising Management?

This thesis is concerned with the need for a more adequate tool for practising managers to enable them to deal with the increasing complexity and rate of change of the world.

The first part of the thesis explores the inadequacies of the currently dominant organisational models before introducing the cybernetic approach. The Viable System Model is introduced and its development and history reviewed before its adequacy is compared with that of the dominant models.

The second part of the thesis reports four interventions carried out using the Viable System Model. Its contribution in each case is evaluated and its strengths and weaknesses in the contemporary organisational context highlighted.

The third and final part of the thesis critically reflects on the whole of the work undertaken. Chapter Eleven adopts a SWOT analysis to provide a critical framework through which the superiority of the Viable System Model as compared to the dominant models is demonstrated. The second part of the chapter considers the theory, utility, ideology and methodology of the model, proposing additions to, and adaptations of, the methodology and ways in which it may be made more accessible.

THE UNIVERSITY OF HULL

The Viable System Model: A More Adequate Tool for Practising Management?

being a Thesis submitted for the Degree of

Doctor of Philosophy

in the University of Hull

by

John Leonard William Beckford

September 1993

I keep six honest serving men

(They taught me all I knew);

Their names are What and Why and When

And How and Where and Who.

(Rudyard Kipling, (1902). *Just So Stories*,

Macmillan (1958 Edition), London).

Contents

Figures

Glossary of Terms

Governor: a device for regulating the speed of an engine or a machine

System: an interrelated set of individual elements carrying out some activity which taken together exhibit properties not to be found in the individual elements

Organisational Cybernetics: the science of effective organisation

Exceedingly Complex: a system so complicated that it cannot be described in a precise and detailed fashion

Self-regulating: a system which can manage itself towards its purposes or goals

Probabilistic: probabilistic behaviour is evident when the outcome of an event or occurrence cannot be predicted in advance

Black Box technique: a technique for exploring the behaviour of a system without the necessity to enter it, or reduce it to its parts

Feedback: communication between two or more interrelated elements such that the behaviour of one controls the behaviour of the other(s)

Variety: a measure of complexity, i.e. the number of possible states of a system

Variety Engineering: reducing the variety of the controlled, or, increasing the variety of the controller

Environment: all those factors external to the defined system but interacting with it

Transducer: a mechanism which carries messages across system boundaries

Metasystem: a logically senior system, conducting its business in a metalanguage to decide propositions which are undecidable at the lower level

Algedonic mechanism: a device for transmitting pain/pleasure signals to the Senior Management

Recursive System: A chain of viable systems in which the structure and connections are identical at every level

Autopoiesis: the ability of a system to produce itself

Acknowledgements

Throughout this thesis formal acknowledgement is made of those authors whose prior work has provided its foundation. However, a number of other people have made substantial, if less apparent, contributions to its completion and my thanks are due to them.

First, to Professor Robert Flood for his willing guidance and advice throughout the period of research whenever it was needed. Second, to the late Robert Mallen, a wise counsel during my previous career, who delighted in the absurdities of contemporary organisational life and provided early inspiration. Third, to Francis Stickland of The City University and my father Gerald for finding the time and energy to read and constructively comment on the whole work. Fourth, to Elizabeth Hutty for converting my rough sketches into useable diagrams. Fifth to the Directors and Staff of the three Companies which are the subject of the case studies, and, to various students on The University of Hull MBA courses for their hard work and critical comment.

Last, and most important, my wife, Sara, for her constant support, advice and encouragement, and my children Paul and Matthew for their tolerance. The children, with others of their generation, will have to manage the consequences of contemporary management actions - I hope that this work will, in some way, make it easier for them.

Preface

Change and increasing complexity in all aspects of our lives seem to be the only certainties in the modern world. The established order is challenged almost every day by developments in technology, political systems, social behaviour and in all types of organisations. These developments generate a need for response by managers who are faced with a bewildering variety of new problems or "messes" (a mutiplicity of ill-defined problems and anxieties), and, are charged with responsibility for solving them. The problems range from the management of relationships between all nations, between racial, religious and other groups within and across nations, and to the management of our "selves" within our societies.

Managers and consultants such as myself use organisational models, abstractions from "reality," to assist in the understanding of situations and the development of "appropriate solutions." Unfortunately the dominant management models such as Scientific Management, Bureaucracy Theory, Human Relations and, less prominently, the Systems approaches, can all be demonstrated to be inadequate for managers needs.

This three part thesis proposes that, whilst not perfect, Stafford Beer's Viable System Model is a more adequate representation of organisation for contemporary Managers than its predecessors. The aim of the thesis is to explore the inadequacies of the dominant models as compared with the cybernetic approach, and, to report experiences of using the Viable System Model both as a tool for organisational problem solving and as a way of thinking about organisation. Finally the experiences will be critically reviewed to highlight the benefits of this approach in attaining organisational survival in an increasingly turbulent environment.

The first part of the thesis consists of six chapters. It aims to highlight the need for a more adequate model of organisation that will enable the complex problems faced by contemporary managers to be addressed, perhaps in some cases to be anticipated and averted and in others to be "dissolved" rather than solved. Chapter One reflects upon the increasing complexity and the rate of change of the world. It is a principally practical chapter showing some absurd results arising from the use of the dominant approaches to organisation and illustrating the inadequacy of those approaches for dealing with problems arising in the contemporary organisational context. Chapter Two introduces each of the principal organisational models, and, with a cautionary note on the nature of models, reviews their strengths and weaknesses. The final part of the chapter introduces the Viable System Model and outlines its apparent strength as a more adequate model for contemporary managers.

Chapter Three introduces the science of Cybernetics and reviews the initiation and development of the subject, focusing on "management cybernetics." The major models in organisation theory are then related to the cybernetic model. The Viable System Model is briefly introduced as the principal model of "Organisational Cybernetics." The Viable System Model is fully revealed in Chapter Four which will demonstrate how the model has been derived from and develops the cybernetic principles discussed in Chapter Three. The chapter concludes with a discussion on the principles of the established methodology for using the model. Chapter Five continues the exploration of the Viable System Model with a literature review that covers the major prior applications of the model and the developments and principal criticisms of the entire approach. This enables the lessons already learnt to be extracted. The philosophical position of Stafford Beer in relation to his model and his concern with human emancipation is explored. Chapter Six, which concludes the first part of the thesis summarises the arguments for and against the Viable System Model and highlights those elements that will be pursued through the case studies and the critical reflections.

The second part of the thesis contains four chapters. Chapter Seven acts as an introduction to this part giving the background, nature and extent of the principal case study, emphasising the major issues and specifying the writer's role. Chapter Eight gives a detailed account of the application in a franchised car dealership, revealing both the successes and failures of the application, as well as aspects with which the Viable System Model was of no help. Chapter Nine moves on from that major application to review uses of the model as a pedagogical device and as a consulting tool in two other organisations. Application of the Viable System Model to the writers' "self" is included as a means of exploring the utility and generality of the model and displaying its competence for small organisations. The need to understand the different roles played by any one individual within an organisation is emphasised. Chapter Ten acts as a conclusion to Part Two, consolidating the work done, reviewing the theory and practice of the Viable System Model and reflecting on the experience. Critical reflection is used to draw out the lessons learned, which are synthesised and expanded upon in Part Three.

Part Three of the thesis contains two chapters. Chapter Eleven adopts a SWOT (Strengths, Weaknesses, Opportunities, Threats) analysis to provide a critical framework through which to review the lessons learnt, to make comparisons with the mainstream models and to demonstrate the greater utility of the Viable System Model. This section is followed by critical reflection on the "new knowledge" gained from the thesis, showing how and where the model may be considered useful, proposing changes to the currently used methodology, and considering ways in which the model can be made accessible as a "mainstream" model for contemporary managers. Chapter Twelve contains final conclusions and closes with proposals for further research into the Viable System Model.

This thesis focuses on the Viable System Model with regard to its ability to enable managers to deal with complexity in organisations. That a second debate could be pursued, about its contribution to dealing with conflict is acknowledged but that

debate falls outside the scope of this enquiry. Each of these aspects deserves separate and comprehensive study. Further to this the main aim of this thesis is to evaluate the Viable System Model as it stands up in practice. This leads the thesis away from debate on conflict which has tended to be a very theoretical area, the main interest is in matters relating to the method and theory of the Viable System Model in practise.

Chapter One

A Problem of Organisation

This chapter reflects on the increasing complexity and rate of change of the world. Flaws and sometimes absurd results arising from application of the dominant approaches to management are presented as an indication of their limitations as problem solving devices in the contemporary organisational context.

1.1 Introduction

I started this research in 1989 after six years of professional practice as an internal consultant with a major financial institution. Experience during that period suggested to me that the traditional tools and techniques used for thinking about organisation and problem solving were inadequate for contemporary management. Situations often appeared intractable when the methods were applied, the complexity absorbing capacity of the tools used not matching the complexity generating capability of the organisational situation. This chapter reveals flaws and sometimes absurd results arising from the application of these dominant organisational models and attempts to establish the need for a more adequate and rigorous model.

1.2 Complexity and the rate of change

> "Today, the stuff of management includes the Four Ms, (men, materials, machinery, money), but is best denoted as: COMPLEXITY." (1, PG 31)

The above quotation from Beer is abstracted from a chapter concerning the measurement of variety in organisations, variety being the measure of complexity; that is, the number of possible states of a system.

1.2.1

The current century has seen substantial development, both in technology, and, in the awareness of human needs and interests. Each step in this development has seemed to increase the rate of change leading to further development, and generating a maelstrom of both new ideas and problems. Every advance seems to have increased variety, (and so complexity), and provided new options and choices, whilst the dominant techniques and philosophies of management do not seem to have kept pace with these changes.

1.2.2

The progress of technology has affected all aspects of our lives from the fundamentals of how and what we eat, drink and breathe to the ways and locations in which we work and play and to the wider "security" of our nations and selves. The development of the aeroplane and jet engine now makes it comfortably possible to conduct business and personal relationships wherever in the world we choose. The maintenance of contact with colleagues and family is facilitated by satellite communications whilst the preparation of a piece of

academic work does not necessarily require full time residence at a University, but perhaps a hotel bedroom, a portable computer and a telephone for "on-line" discussion with a supervisor.

1.2.3

One outcome of these developments is the increase in the number of possible interactions between people, organisations and nation states. This increase in complexity may be expressed as a function of the number of options available, i.e. variety. Another outcome is that every step seems to follow its predecessor more rapidly. Earlier technologies lasted the lifetime of an individual, major steps forward in technology being witnessed once in a lifetime or even over a period of centuries. In the contemporary world what happens today becomes history today, the life cycles of products, and of the organisations that make them, seeming to become ever shorter.

1.2.4

The flood of development seen during the late 1980's has abated in the early 1990's and the Japanese consumer products companies in particular are reviewing their marketing, product development and product life cycle strategies(2). However, this should be seen as a temporary abatement driven by relatively short-term changes in the global economy rather than a slowdown in fundamental development. The pace of technological change may reasonably be expected to continue to increase even if, for short periods, consumers are unwilling or unable to take advantage of it. Nevertheless, the possibility of a high pace of reversionary technological change to a fundamental survival economy cannot be entirely discounted for developed economies in the wake of recent

developments in Eastern Europe and Russia and the development of industrialised economies throughout the Asia-Pacific region.

1.3 Problems with problem solving

1.3.1

The increasing complexity and consequent uncertainty of the contemporary world need to be reflected in the conduct of the tasks of management. However, it seems to be the case that most managers still adhere to the models of organisation developed in and for a simpler time. Dominant management models and decision making tools or disciplines largely focus on a "reductionist" view of the world, fragmenting problems and organisations and concentrating on improving the "epiphenomena"[3, PG XI] of the system rather than the system itself. The continued use of these tools and models and the reliance on the assumptions that underlie them often appears to generate absurd and unhelpful responses to contemporary organisational problems. These tools often enable some incremental development but do little to address more fundamental issues. It seems that installing mechanisms to ensure ongoing adaptation of organisations should be considered desirable in a continually changing world, yet the search is normally for "the one best way", or, "the one best tool", for dealing with a situation, and, once it has been discovered, adhering to it at all costs.

1.3.2

One example is the 1991-93 UK recession. This may be viewed as a function of the inadequacy of current management practice at corporate, national and international government level. The speed of the boom and bust cycle, which

appears to have increased throughout the twentieth century, seems to be accelerating as economies are alternatively stimulated and repressed according to the outputs of inadequate econometric models using outdated information. Each response to a further change in "economic indicators" appears to be more out of phase with the situation than its predecessor, and is made in apparent ignorance of the behaviour of other economies and governments. Each government seems to be attempting to manage its economy independently of others despite those economies being almost inextricably linked through global companies and markets, such linkages perhaps tending towards the development of the phenomenon which Robb(4) has called Suprahuman Autopoietic Systems, i.e. systems which are self-producing, and in principle, beyond human control.

1.3.3

Beer (1 PG 375), whilst surely not the first to raise the issue, says, in a discussion on measurement, that "If our information is six months' out of date, then (since information is what changes us) we are ready to deal with a world that is past and gone". Since that work was published in 1979 there appears to have been little progress, information used for decision making is still out of date, i.e. by the time it is received the situation has changed. It may now perhaps be three months old rather than six, but decisions are still being made based on what has already happened rather than what may be expected to happen now and in the future.

Government decisions about interest rates may demonstrate this point. Following the relaxation in the UK of exchange and credit controls, the 1980's saw a massive expansion in credit for personal purchases such as consumer durables and property. Individuals and businesses borrowed against an expectation of economic growth and low interest rates, assuming a continuation of the, then present and recent past, into the future. Demand for many products exceeded supply which led to an increased level of imports, price rises and "inflation" in the

economy. The government answer to this was to raise interest rates perhaps with the intention of reducing demand through more expensive credit and thereby suppressing inflationary effects.

This raising of rates affected both new and existing borrowers equally so that even those who had borrowed "wisely" were penalised by the change. The change was further compounded by the determination to maintain a fixed position within the European exchange rate mechanism (ERM) that required the government to retain high interest rates, and thus the investment value of the pound, beyond the apparent requirements of the UK economy. The effect of all this has been a substantial fall in house prices, which were seen as having reached unrealistically high levels in relation to incomes, a 30% fall in the new car market, and the failure due to interest costs of a large number of businesses. This has been accompanied by a substantial rise in unemployment. Each of these aspects interacting with every other reinforced the effects.

1.3.4

Failures can perhaps be seen here in more than one area. Firstly action was taken too late and with too broad an effect. Secondly, subsequent actions, such as the joining of the ERM, reinforced the damping effect at the time when it should perhaps have been easing. To the first failure an alternative could be considered, that increases in base lending rates should only be applied to new borrowing. This could be anticipated as having the effect of slowing down rather than reversing growth trends. While technology exists which would make this feasible, significant change would be required in the financial relationship between the central and commercial banks.

The second failure is more straightforward for, regardless of the rules and regulations surrounding the European exchange rate mechanism (ERM), it is

difficult to see how it can ever be made to work. World-wide, currency markets exist to facilitate international trade. Most major currencies are floated independently and market forces largely determine their relative values. If a currency, or group of currencies, is isolated and relative exchange rates fixed by a mechanism that requires other members of the group to intervene and support the weakest ones, then a market is created for speculative trading in those currencies. This is an invitation to money brokers to increase their profits at the expense of the countries involved through relatively small transactions. It is not necessarily the individual amount of funds traded which is important but the number of transactions and the nature of the activity in the market, that is its dynamics. Traders in currency make their profits in the same way as any other trader, that is they define an opportunity or flaw in the market and "work it" to their advantage.

The removal of the pound and other currencies from the ERM to allow them to find their market value was followed by speculative trading in the next most vulnerable, i.e. that which was considered by currency dealers to have a price different to its value in terms of the analysts view of the health of the economy of the nation concerned. This process eventually culminated in a relaxation of ERM rules which widened the fluctuation bands for most currencies remaining within the system to 15%. A banker engaged in foreign currency transactions will normally regard 10% as an adequate contingency allowance against currency fluctuations and hence the implementation of 15% movement bands may be regarded as an effective suspension of the mechanism, since currencies would not normally be expected to vary in value to that extent.

1.3.5

These examples, whilst simplified and excluding many factors of fiscal policy, commercial duplicity and political and ideological engineering, both show a

"reductionist" approach to managing situations. The first shows the attempt to use a single tool to manage one economy in isolation from others. The second the belief that an international trading currency can be "isolated" from the influence of its environment.

1.3.6

A further problem of the traditional approach is that if "right" answers are provided at all, it is instantaneously. They are derived at a particular time in a particular environment, or set of circumstances. However "right" they may be for that particular time, any change in the organisation or its environment will render them inappropriate.

Organisations tend to deal with this problem in one of two ways. First they try to ignore the need for change, a particular feature of bureaucracies. Second, they may spend large sums of money on "management services" departments such as Organisation & Methods or Work Study and Systems Analysis and Development issues, to study and review systems, procedures, work methods and management structures and make recommendations for change.

1.3.7

Taking the first of these options, unless it is subsidised or in some way protected, the organisation is likely to eventually undergo some major trauma such as insolvency, or alternatively be ignored or substituted by its potential users. Examples of this latter alternative are the Education and Health Services in the UK that are funded by taxpayers. They are perceived by many not to provide an acceptable standard of service and a significant proportion of the population, who

have the financial ability, are willing to pay again to private institutions to obtain the level of service that they require. Examples of insolvency through failure to adapt to changes and customer requirements may be seen in any of the so called "sunset" industries throughout the world, e.g. Coal mining and shipbuilding in the UK. Complexifying factors which are not accounted for in these simple examples include, political and commercial duplicity, funding and taxation arrangements and ideological influences.

1.3.8

The second option, whilst perhaps better in terms of organisational survival, suffers from the problem that in the time taken to review a situation, recommend changes and implement them the circumstances have frequently changed again. This renders the "solution" obsolete before it has been implemented. Thus many organisations could be paying for problem solving departments whose long term existence is guaranteed by the inadequacy of their techniques and tools. Rather than reducing costs for the organisation these may be increasing them because they can never "solve the problem" since it continually changes. Figure 1 attempts to illustrate this situation.

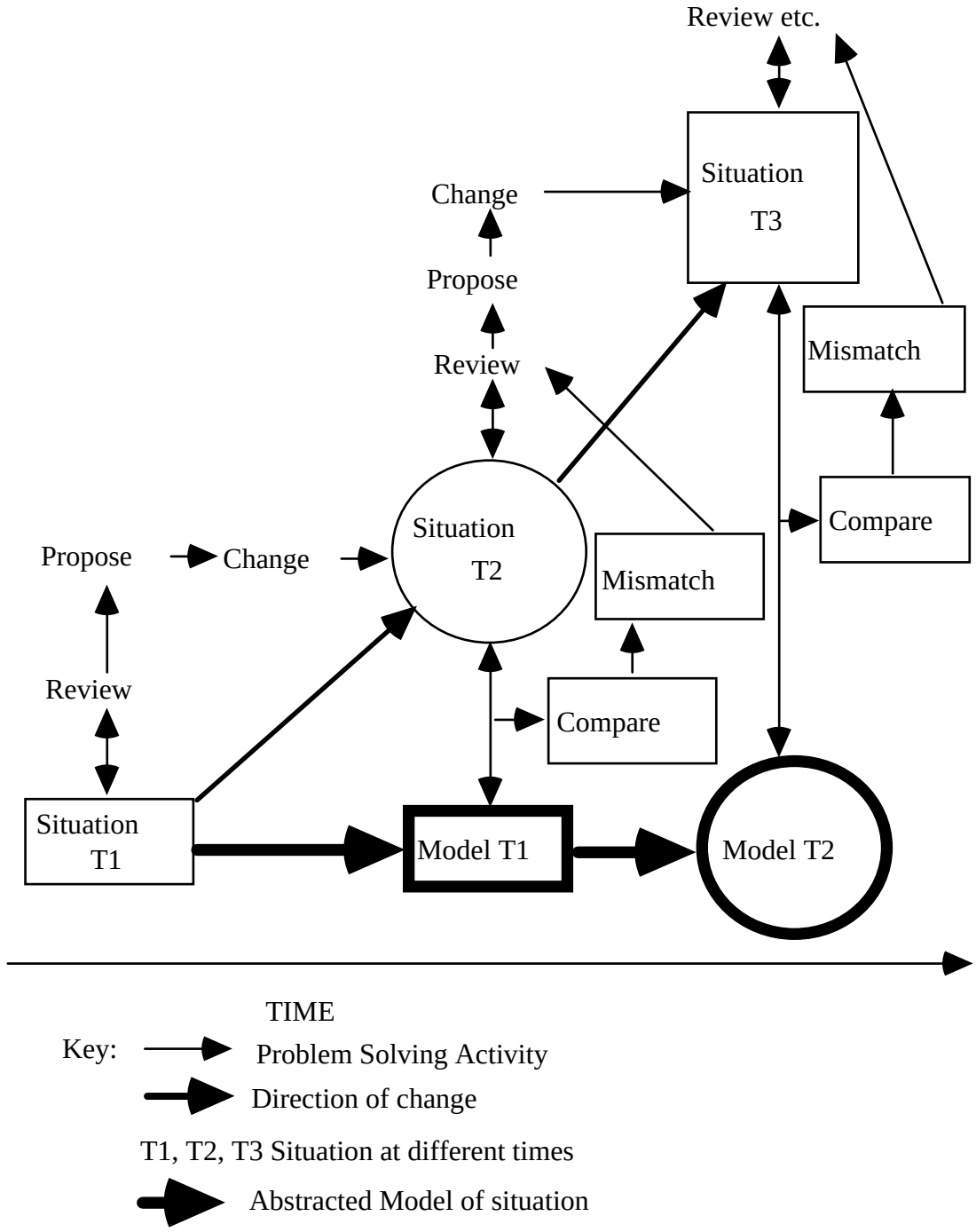

Chasing "the problem"

Figure 1

A "problem situation" is identified at T1 and subjected to a review, a key assumption of which is that the present problem needs to be and can be cured. During the period that elapses whilst the review is undertaken, proposals formulated and agreed and changes implemented, the situation has moved from

T1 to T2. The results of the investigation of T1 are compared with the new situation, either after a failed implementation or at a follow up review. A mismatch between the "solutions" proposed and the current situation, T2, is discovered and so a further review is undertaken to "correct the mistakes". Whilst "solutions" are being formulated to the situation existing at T2 further changes are taking place leading to a new situation, T3, which will again generate a mismatch between solution and problem. The cycle continues with a continual gap between the perceived situation and the "reality".

The scale of the gap will vary with the extent of the review undertaken. Elapsed time between the start of the review and the acceptance of recommendations, the extent of the changes being proposed and the rate of change of the situation will all affect this aspect. There are cases, such as in short run production environments, where every new order will require a "review" of staffing, procedures etc. Such situations accentuate the need for managers to be equipped with adequate problem solving tools and for the organisation to be structured to deal with the requirements of its operating environment.

1.3.9

A small example of the problem-solution gap may be a work study analyst. A clerical procedure will be studied in fine detail, its elements reviewed, and a revised procedure devised to make it more efficient. Using a database of established task times a "standard time" for the job will be synthesised and a workload monitoring system developed and installed based upon the results. As a professional, the analyst will compare a number of clerks undertaking the revised

procedure and, after "rating" the "standard time" will use an average result as the basis of monitoring. There are a number of flaws in this:-

> The clerks will often utilise a different procedure to that which has been timed.
>
> Over time the team of clerks will change and the replacements will either not be trained to work in the same way or will have a different average rate of work.
>
> The procedure becomes "institutionalised" and will resist further adaptation. (Hence the expression, "We've always done it like that!")
>
> The procedure is based on the analyst's view of "how the situation is". That is it is dependent on the perception and acuity of the observer.
>
> The database used by the analyst may not provide an accurate time for the tasks being measured and another time may be "adapted".

The extent of the mismatch between the "measured workload" and apparent workload undertaken is often quite significant.

1.3.10

A larger scale example would be a review of the management structure of an office of, say, 100 people. This situation is vastly more complex than that outlined above. Whilst an organisation chart may be in place that shows who reports to

who, and, who is responsible when things go wrong, it tells nothing of "how the organisation works." Nonetheless, a review is undertaken in an attempt to develop a revised organisation structure, which is intended to make the office more effective in achieving some more or less well defined objective. This process will take some considerable time, and, using traditional approaches will concentrate upon aspects such as unity of reporting lines, span of control and, inevitably, the traditions of the particular organisation.

A new chart will be derived, negotiated with the manager and, normally after some modification, implemented with consequent impacts on individuals, numbers employed, etc. This may or may not lead to an "improvement" in the situation. Very often a number of staff change seats, some will change job titles and job descriptions, but nothing else changes. The way in which the organisation works has been unaffected by the process because the organisation does not work according to the lines on the organisation chart but upon the interactions of the people, their needs and desires. The whole exercise has been futile.

The flaws in this situation are:-

> The way in which the organisation actually works was not, and probably could not be, fully understood.
>
> Any observations made by the "problem solver" will have been made from his or her "expert" perspective, often without any consultation with the job-holders.
>
> The "actual" situation has developed throughout the review period, through staff changes, differing requirements and procedures, such that a solution is being proposed to a problem which no longer exists in the form studied.

The difficulty seems to be that the approach to solving problems adopted by most organisations is almost certain to fail because the underlying assumptions are flawed. These assumptions are:-

> The organisation can be understood through reductionist analysis of the component parts.
>
> Improvement to the parts will necessarily improve the whole.
>
> The situation under examination is static and a "solution" can be developed which will apply to that situation even after time has elapsed.

1.4 Conclusion

It is the contention of this chapter that the models of organisation on which current management practices are based and which are exemplified above are themselves now problems. The management of complexity means creating processes for dealing with the actions and interactions of whole organisations within the context of a perceived purpose and a defined environment whilst recognising the need for ongoing adaptation to changes in all their aspects.

This thesis will follow two main themes, firstly that it will be both more effective and less costly to develop organisations of which mechanisms of learning and adaptation are an integral part instead of an optional extra. Secondly that an "expert" should seek to work with and develop the "problem owners" view of a situation to enable a problem to be dissolved rather than seek to impose his own view, and solution, upon it.

The final argument is that a systems perspective needs to be taken and that one essential problem of organisations is organisation.

Chapter Two

The Dominant Models for Organisation

This chapter opens with a cautionary note on the nature of models. A critical review of the dominant management models is then undertaken which seeks to demonstrate their strengths and weaknesses and highlights their underlying assumptions about the nature of organisations. Finally the Viable System Model is introduced as a more adequate model for contemporary managers.

2.1 Models of organisation

The four principal models in organisation theory are the Traditional or Rational, Human Relations, Systems and Cybernetic. These approaches each have their own particular strengths and weaknesses and these will be explored in this chapter. The metaphors employed by Flood & Jackson(5) will be used and they make the point that "management theories offer only partial visions of what organisations are like"(5 PG 2). It is essential to maintain this awareness that any organisational model is only an explicit projection of a particular viewpoint, that is, a representation of one view of "reality". It is "neither true nor false: it is more or less useful," Beer (3 PG 2).

The first part of this chapter addresses that point, which may be simply exemplified; the chapter proceeds by reviewing the dominant models for organisation and is, necessarily, my model of what has been written about them. I trust it is "useful".

2.2 Problems with models of organisation

That particular models of organisation have survived and proved "more or less useful" for lengthy periods may be seen as a reflection of their perceived utility during that time. For example, many organisations have applied, and continue to apply, the principles of Taylor's Scientific Management with direct benefit to productivity or output although not, apparently, to human emancipation. A problem with all organisational models is, that if their apparent utility is sufficient for them to gain a general acceptance, and, a close enough match occurs between the personal desires, beliefs and expectations of the observer or user and the outcomes of utilising the model, then the model may come to be seen as the "reality". That is, the model is seen as "How it (the organisation) is". The attempt is then made to make the organisation a reflection of the model rather than the model an interpretation of the organisation.

The danger arising from this attitude is that any flaw or weakness in the model may be replicated in the organisation. An organisational model cannot be perfect unless it contains all the complexity that may be generated and absorbed by people, by their interactions with each other and by the technical and environmental aspects of that which is modelled. None of the existing models can claim to do this, each representing a low variety perception of "reality" from an explicit or implicit philosophical, social or technical viewpoint.

The subsequent parts of this chapter will attempt to reveal these viewpoints in the critical review of the dominant models. The major issue when the Viable System Model is introduced is that it is proposed as being "a more adequate model for contemporary managers" than the others. It is not and cannot be perfect, it is an abstraction from "reality" and as such holds different value and meaning for every observer.

2.3 The Rational (Machine) Model ("Closed System")

2.3.1

The "machine" model of organisation reflects the scientific management approach developed by Frederick Taylor, the classical theory of Henri Fayol and the bureaucracy theory of Max Weber. These collectively still dominate mainstream management thinking. Each of these approaches regards the organisation as a "technical apparatus"(5 PG 8), and depends upon fragmenting or dissecting an organisation into its component parts for analysis and operation.

The "machine" approaches to organisation each arose in the late 19th and early 20th centuries and may be considered as logical extensions of the advances then being made in machine technology. Machines are, in general, designed to perform specified tasks at known input/output rates and within specified tolerances; these approaches assume that organisations can be similarly designed.

2.3.2

Taylor's Scientific Management is based on the four principles, that management should(6 PP 36-37):-

> "....develop a science for each element of a mans work, which replaces the old rule of thumb method."
>
> "....scientifically select and then train, teach and develop the workman, whereas in the past he chose his own work and trained himself as best he could."

> ".... heartily co-operate with the men so as to insure all of the work being done in accordance with the principles of the science which has been developed."
>
> ensure that "....There is an almost equal division of the work and the responsibility between the management and the workmen. The management take over all the work for which they are better fitted than the workmen, while in the past almost all of the work and the greater part of the responsibility were thrown upon the men."

Huczynski and Buchanan(7 PG 282) see Taylor's objectives as being first, to improve efficiency by increasing output and reducing "underworking", what Taylor(6 PG 19) described as "natural soldiering" and "systematic soldiering". Second, to achieve "standardisation of job performance, by dividing tasks up into small and closely specified subtasks." Finally, to instil discipline, "by establishing hierarchical authority and introducing a system whereby all management's policy decisions could be implemented."

Whilst Taylor recognised that the worker in a given situation had a(6 PG 32) "mass of rule of thumb or traditional knowledge," which constituted his "principal asset or possession," he had a poor view of the capabilities and intelligence of the worker. For example, he believed(6 PG 40) that "the science of handling pig iron is so great and amounts to so much that it is impossible for the man who is best suited to this type of work to understand the principles of this science, or even to work in accordance with these principles without the aid of a man better educated than he is."

Taylor, saw the organisation as a machine, capable of being specified, designed and controlled by management to achieve a given purpose. The workmen were viewed as standardised machine parts, interchangeable with every other of like

design and to be used at the discretion of management. His approach was later followed by Gilbreth and Gantt who both attempted to "humanise" Scientific Management, recognising the need for rest (Gilbreth) and human needs and dignity (Gantt), albeit the assumption remained that the worker was principally motivated by money.

2.3.3

Henri Fayol used the "machine" metaphor in writing that(8 PG 57):

> "The body corporate of a concern is often compared with a machine or plant or animal. The expressions, "administrative machine," "administrative gearing," suggest an organism obeying the drive of its head and having all of its effectively interrelated parts move in unison towards the same end, and that is excellent."

His perception of the excellence of the "machine" view is evident in his proposals for organising and managing. He proposed(8 PG 53) that "to organise a business is to provide it with everything useful to its functioning: raw materials, tools, capital, personnel" and saw six sets of activities as producing the organisation, Technical, Commercial, Financial, Security, Accounting and Managerial.

Fayol's proposed duties of managers reinforce this view, these are(8 PP 53-54):-

> To ensure that the plan is judiciously prepared and strictly carried out.

See that the human and material organisation is consistent with the objectives, resources and requirements of the concern.

Set up a single, competent, energetic guiding authority.

Harmonise activities and co-ordinate efforts.

Formulate clear, distinct, precise decisions.

Arrange for efficient selection - each department must be headed by a competent, energetic man, each employee must be in that place where he can render greatest service.

Define duties clearly.

Encourage a liking for initiative and responsibility.

Have fair and suitable recompense for services rendered.

Make use of sanctions against faults and errors.

See to the maintenance of discipline.

Ensure that individual interests are subordinated to the general interest.

Pay special attention to unity of command.

Supervise both human and material order.

Have everything under control.

Fight against excess of regulation, red tape and paper control.

The managerial duties reflect Fayol's fourteen principles of Management: Division of work (specialisation), Authority, Discipline, Unity of Command, Unity of Direction, Subordination (the interest of the organisation is more important than that of the individual), Remuneration, Centralisation (a question of continuously varying proportion), Scalar chain, Order, Equity, Stability of tenure, Initiative and Esprit de corps.

Some of these "managerial duties" and Principles of Management appear to conflict with the machine view and with each other, e.g. "Define duties clearly" and "Encourage a liking for initiative and responsibility", or "specialisation" and "initiative," the first of which would in each case appear to preclude or at least make difficult the second. The admonition to managers to "fight against excess of regulation, red tape and paper control" stands in sharp contrast to his view that the work should be "clearly divided", "judiciously planned and strictly carried out," aspects which carry with them an implication of machine like precision and heavy reliance on record keeping.

The overall impression remains that Fayol, like Taylor, viewed the organisation as a machine. The management were responsible for forecasting, planning, organising, commanding, co-ordinating and controlling whilst the "workers", distinguished by "technical ability characteristic of the business,"(8 PG 8) were component parts to be fitted into the machine at the most appropriate place with "a place for everyone and everyone in his place."(8 PG 36)

2.3.4

Max Weber's "Bureaucracy Theory" is developed from his views of three types of legitimate authority in organisations, Rational, Traditional and Charismatic. The first of these was seen by Weber(9 PG 3) as representing legal authority, with "obedience owed to the legally established impersonal order." He considered that(9 PG 8) the "purest type of exercise of legal authority is that which employs a bureaucratic administrative staff," and that bureaucracy was not simply desirable but indispensable to cope with the, then, complexities of organisations. He considered that the increasing general technical knowledge had as a consequence, a need for an increase in the particular technical knowledge of individuals, in order for them to effectively administer an organisation.

A bureaucracy was seen by Weber as being composed of a hierarchical organisation of "offices", each acting according to the rules and norms of the organisation within a specified area of competence. Individuals within this structure were appointed on rational grounds to perform a specified function, without gaining rights to that appointment or having ownership of the organisation. All decisions, rules and acts were to be recorded in writing, in order, together with the "continuous organisation of official functions," to "constitute the office." Weber saw a clear choice in organisations between "bureaucracy and dilettantism"(9 PG 12), and proposed that bureaucracy was an inevitable requirement to support large organisations.

The "machine" view is evident again in this case, Weber proposing that every function, and every act of every office is capable of being specified to an exact degree. People were clearly viewed as functionaries within the bureaucracy, bringing no human element to the conduct of the affairs of the organisation.

2.3.5

There are a number of assumptions underlying these three rational views of organisation which need to be stated before summarising their strengths and weaknesses. These assumptions are:-

that an organisation can be treated as isolated from environmental influence;

that an improvement in the performance of a part will necessarily improve the performance of the whole;

that the organisation must be studied from the perspective of the goals of management;

that an organisation can be understood and designed in machine terms to perform a particular function and once so designed it need not be adapted.

Each of these assumptions has been challenged through developments in thinking about organisations and human well-being during the current century. Practical experience of using the model in organisations has also shown that the assumptions are flawed. Flood & Jackson(5 PG 9) consider that the machine view is useful in practice when the organisation operates in a stable environment, performing a straightforward task, such as repetitive production of a single product and when the "human parts" are prepared to follow "machine-like" commands. They consider that its usefulness is limited since it reduces the adaptability of organisations and the "mindless contribution" is difficult to maintain with "mindful parts", leading to dehumanisation or conflict.

The strengths of the model are:-

that it enables systematic, methodical analysis of specific tasks;

it assists in "ordering" organisations (deriving order from chaos);

it provides a useful guide to creating organisations where demands on individuals need to be precise or exact, e.g. the Armed Forces or the Nuclear industry.

Its weaknesses are:-

that no account is taken of influence by or on the environment of the organisation;
there is little acknowledgement of the interdependence of parts and no means of dealing with it;

there is no recognition of the possible need for adaptation and how to address that need,
the model is static not dynamic;

people are "dehumanised";

no help is provided with determining the "purpose" of an organisation;

the emphasis on "command" and "control" through the use of hierarchy may give succour to the "inevitable growth of bureaucracy";

the focus of attention is principally "commercial" organisations;

it is only applicable to organisations which are "real", that is those which have some legal or formal existence, it cannot help with informal organisations;

whilst the tools may be used in a diagnostic way to compare an actual situation with a proposed ideal, no prescription for "curing" ineffective organisations is offered.

It can be seen then that whilst the "machine" view offers some assistance, its weaknesses are such that it must be seen as an inadequate approach for managers today.

2.4 The Human Relations and Systems (Organic) Model ("Open System")

Whilst benefits could and can still be obtained from the rational approaches, their lack of humanity is demonstrated by the difficulties which emerge during their application with the people involved. The human relations model of organisation emerged as a means of addressing these difficulties, and was the first significant challenge to the "machine view".

The "organic"(5 PG 9) or "organism" analogy stems from the origins of modern systems thinking in the biological sciences and attempts to deal with attainment of survival of the system rather than achievement of particular goals. While survival may be seen as a legitimate goal it may not sufficiently represent the purpose of the organisation. This "organic" view first found expression in organisations through what has become known as the Human Relations Model. This considers that attention must be paid to the human aspects of organisation and gives

primacy to the roles, needs and expectations of the human participants. Particular emphasis is given to issues of motivation, management style, and participation as critical success factors.

2.4.1

While the "Hawthorne" studies of Roethlisberger and Dickson with Mayo indicated an early systems approach to management (10 PG 74), attempting to capture and understand the relatedness of all the parts involved, later work in this field by Maslow, Herzberg etc., did not use a systems model. The later developments still adopt a reductionist and "closed system" view of the organisation, concentrating on improving the performance of parts not wholes.

Mayo argued that, "In modern large-scale industry the three persistent problems of management are (11 PG 61):-

> The application of science and technical skill to some material good or product.
>
> The systematic ordering of operations.
>
> The organisation of teamwork - that is, of sustained co-operation."

Following Chester Barnard, he saw that the first two of these would operate to make an industry effective, the third to make it efficient. He considered that the application of science and technical skill and the systematic ordering of operations were attended to, the first by continuous experiment, the second being already well developed in practice. He saw the third element as neglected but necessary if the organisation as a whole were to be successful.

Mayo became involved in the "Hawthorne" studies after they had examined the effects on workers of changes in the physical environment. Experiments had shown that social and psychological factors were present and the studies became focused on these human issues, whilst records were kept of every aspect of changes made and their impact, to establish a "systemic" view. Further experiments were conducted and followed by formal interviews which revealed that many of the particular organisations' difficulties related to emotional rather than rational conditions. A further experiment showed that informal group pressures had more influence on output and performance than the economic pressures of the formal organisation.

The "Hawthorne" studies are credited with having discovered the importance of groups in organisations, the influence of the observer on the observed, and the need to ensure that the goals and objectives of staff are not in conflict with those of the organisation. Notwithstanding subsequent criticisms of the research methodology and interpretation of the findings, the studies are generally seen as the foundations of the human relations approach.

2.4.2

Maslow(12), whilst seeing that the "individual is an integrated, organised whole"(12 PG 19), proposed a hierarchy of human needs. These needs were; physiological (food and health), safety (security), belongingness and love (the need to belong to a group), esteem (the need to be valued by oneself and others), and, self-actualisation (the need to be all that one can be). He considered that the needs were all contained within each other such that "if one need is satisfied then another emerges"(12 PG 53) although the satisfied need remains present, that is to say that each need is ever present even when not "prepotent."

2.4.3

Frederick Herzberg, in his studies of motivation in the industrial and commercial context, built upon the foundation laid by Maslow. Through a series of observations and interviews with samples of people at work, he found that two sets of factors influenced the level of motivation; these he called "hygiene" and "motivators."(13) "Hygiene" factors concerned the maintenance of conditions that were conducive to satisfaction. If satisfactory conditions did not pertain then the worker would be dissatisfied with his job position; conversely, achievement of a satisfactory standard would not positively motivate. Positive motivation would be derived from "motivators" which were seen as actively encouraging an increased contribution. These factors are summarised as follows(7 PG 74):-

> Motivators - Achievement, Recognition, Responsibility, Advancement, Growth, The work itself.
>
> Hygiene - Salary, Company Policy, Supervision, Status, Security, Working conditions.

Summarising, Herzberg concludes that in order for organisations to achieve improved levels of performance they must address both types of factor. He considered that "good hygiene will prevent many of the negative results of low morale"(13 PG 131), but this on its own was not enough, writing, "our emphasis should be on the strengthening of motivators."(13 PG 132) This he saw as being achieved by restructuring jobs; providing workers with some degree of control over their achievement; meaningful job rotation; selection of staff to match the needs of the task; effective supervision through planning, organising and support (a link with Taylor's work); and, appropriate participation.

Finally, Herzberg et al, recognised that "there are large segments of our society to which these prescriptions cannot possibly apply"(13 PG 138). They considered that these people could obtain a good life from "fruitful hobbies and improved lives

outside the job," and that "the greatest fulfilment of man is to be found in activities related to his own needs as well as those of society"(13 PG 139)

2.4.4

The principal strength of the Human Relations model is the emphasis that it places on the human element of organisations, recognising that people are not "machine" parts but individuals who have needs and desires.

There are a number of weaknesses in this approach that make it inadequate for the needs of contemporary managers. Firstly, notwithstanding the warning from Herzberg et al, that human needs could be, and for some people, need to be met outside the workplace, the assumption underlying many applications of Human Relations Theory is that these needs must be met at work. Secondly, the human relations model does not allow for the supremacy of the organisational goals and objectives, its needs driven by technology, or the operating environment, over human goals and needs; a supremacy which, in terms of the organisation's survival, may be necessary. Finally, and, in terms of this debate perhaps most importantly, the model does not assist with the specifics of designing and structuring organisations to cope with the complex tasks faced by contemporary managers nor with the interface of the organisation with its environment.

2.4.5

Systems Thinking emerged as a further challenge to the traditional and human relations models and falls within the "organic" view. This approach is "holistic", attempting to deal with organisations as "wholes" rather than parts, considering the organisation as a complex network of elements and relationships, and recognising the interaction with the environment in which the organisation is

contained. Thinking about organisations as "systems" has built upon the early work of Barnard, Selznick and von Bertalanffy to become a major, if not dominant, approach for managers.

Parsons and Smelser are seen by Jackson(14) as having made the best known attempt to "elaborate four functional imperatives to be fulfilled for a system, by its sub-systems, if that system is to continue to exist." These imperatives are adaptation, goal-attainment, integration and latency (pattern maintenance) and make up the AGIL mnemonic. These terms are taken to mean(14 PG 57):-

> A = Adaptation; the system has to establish relationships between itself and its external environment.
>
> G = Goal-attainment; goals have to be defined and resources mobilised and managed in pursuit of those goals.
>
> I = Integration; the system has to have a means of co-ordinating its efforts.
>
> L = Latency (or pattern maintenance); the first three requisites for organisational survival have to be solved with the minimum of strain and tension by ensuring that organisational "actors" are motivated to act in the appropriate manner.

Jackson(14 PG 57) interprets this differently, seeing four primary sub-systems, goal, human, technical and managerial, as essential prerequisites. He considers that effectiveness and efficiency are attained through the interaction of the sub-systems in pursuit of the purpose of the system in its environment.

The goal sub-system is concerned with the purpose of the system and the means of achieving that purpose; the human sub-system deals with the people and their management and motivation; the technical sub-system handles the operations (i.e. input - transformation - output); and the managerial sub-system co-ordinates and manages each of the others, balancing their relationships and attending to the environmental relationships.

While the "systems" model provides a broader view than the machine and human relations models, in particular in its recognition of the environment, it still retains some particular weaknesses. Firstly it takes survival as the primary aim of the system, overriding achievement of goals and effectively ignoring the high volume of achievement oriented activity undertaken in contemporary organisations of all types. Secondly, the systems model seems to "reify"(15 PG 4) organisations, to grant them a "mind," that is to say, to allow them power of thought and deed. This is to ignore the rational human activity which drives the apparently mystical adaptations. Thirdly, no adequate method of measuring achievement of goals has been developed. Fourthly, interdependence of the parts is stressed but, again no measurements are available for determining "how much interdependence" does or should exist. Finally, the "solutions" proposed in the theory are vague and untested, emphasising system maintenance perhaps to the detriment of survival through the inhibition of radical change.

To summarise the "organic" view, while the Human Relations model gave primacy to the role of the people in the organisation and suggested ways of increasing their satisfaction, it did nothing for the achievement of the objectives of the organisation and said little about how the complex tasks of the organisation could be structured. The Systems model, whilst taking account of the environment for the first time, focuses on survival rather than objectives. It does not attempt to quantify the success of an organisation, and says little about "how" organisations adapt. The potential for relative autonomy is not explored and little specific advice is offered in terms of "tested" remedies for ineffective organisations.

2.4.6

Flood & Jackson(5 PG 10) consider that the "organic" view is of practical value when, there is an open relationship with the environment, when survival or adaptation needs are predominant and when the environment is complex. They believe that it fails because it does not recognise that organisations are socially constructed phenomena which, it can be argued, need to be understood from the perspective of the participants; emphasis is on harmony, whereas conflict and coercion are often present, and, change is environmentally driven, rather than driven by the organisation itself.

This "organic" view, whilst offering some significant advantages over the "machine" view still appears inadequate for contemporary needs.

2.5 <u>The Neurocybernetic ("Viable System") Model</u>

Stafford Beer's Viable System Model (VSM) emerged from his work on cybernetics in the 60's and 70's. It is an observer dependent and general model of any organisation, developed in "*The Heart of Enterprise*"(1) from cybernetic first principles. It takes a holistic view of organisation, and draws on cybernetic principles to deal with the underlying structure of organisation itself rather than with the "epiphenomena"(3 PG XI) of the system.

2.5.1

Beer proposes that a viable system must have five sub-systems dealing with implementation, co-ordination, control, planning and policy. These five sub-systems are connected via a network of communication channels and transducers, which carry information on a real time basis. This structure is considered to enable the organisation to learn and adapt so that it can survive in a changing environment. It is Beer's argument that organisations must answer to the laws of viability and that use of the model in a diagnostic process will enable the identification and rectification of faults that threaten survival.

Beer believes that use of his model will enable organisations to deal more adequately with the increasing complexity of the world than the more traditional approaches. The best known application to date was in Allende's Chile in the early 70's, an application cut short by the revolution in that country. This was an attempt to model a national economy, something which could not even be considered with the models of organisation described earlier in this chapter.

2.5.2

The Viable System Model, as with any other, is not immune to criticism. It is seen to be difficult to apply in practice, both because of the lack of an adequately refined methodology, recently addressed by Flood & Jackson(5), and because its effective use threatens the power and influence of the "establishment". It is claimed to be open to autocratic abuse because it emphasises control. Beer himself is obviously concerned with human interests and notes that human beings are at the heart of any enterprise and that overriding human interest will threaten viability, a part of the philosophy of the Viable System Model that is often forgotten.

The model is seen by many to be relying on mechanical and biological analogies

although Beer[1] again states that these are explanatory devices, the model being developed from first principles of cybernetics. Variety, the measure of the number of possible states of the organisation is criticised for being an inadequate measure for scientific work, and is seen as uninformative in relation to the management of social organisations.

While Beer emphasises the ability to learn and adapt as being key abilities of a Viable System, the model is accused of emphasising stability at the expense of change. This accusation is carried through to the concern with the achievement of goals which are considered to be pre-ordained in the definition of the system, and to disregard environmental relationships necessary for survival. The model is further held to give an impoverished account of the organisation, missing out much of importance, and to understate the purposeful behaviour of individuals.

2.5.3

Following Flood & Jackson's first principle of Total Systems Intervention[5 PG 50] that, "organisations are too complicated to understand using one management "model" and their problems too complex to tackle with the "quick fix";" it is not proposed that the Viable System Model is the only useful model of organisation. It is proposed that it is the most useful to contemporary managers. This is because it attempts to deal with the invariant nature of organisation itself and with the systems of communication and control which determine the "nature" of the system and its emergent characteristics. These in turn determine the "metaphor" through which the participants in the organisation will view it, that is whether they consider that they work in a "machine", "organic" or other type of organisation.

2.6 <u>Summary</u>

This chapter, after warning of the limitations of models and the dangers of over-reliance on them, has, through a critical review, attempted to show the inadequacy of the dominant models used by managers to deal with the complexity of contemporary organisations. The Viable System Model has been briefly introduced and some criticisms stated: notwithstanding these, the model is proposed as the most adequate representation of organisation currently available to managers.

The next chapter will introduce the science of cybernetics and its development to date. The cybernetic models will then be related to the major models already described and the distinction between "management cybernetics" and "organisational cybernetics" will be explored.

Chapter Three

The Cybernetic Insight

This chapter introduces the science of cybernetics and the principal models in "management cybernetics". The first section reviews the development, history and multi-disciplinary nature of the science, and considers the principles and tools of the cybernetic approach. The next part relates the cybernetic model to the dominant models explored in Chapter Two. The distinction between "management cybernetics" and "organisational cybernetics" is then drawn and the Viable System Model revealed as the principal tool of the latter.

Terms used throughout this chapter are explained in the glossary of cybernetic terms.

3.1 Development and History of Cybernetics

> "As to sociology and anthropology, it is manifest that the importance of information and communication as mechanisms of organisation proceeds beyond the individual into the community".(16 PG 27)

Cybernetics was defined by Wiener(16) as "the science of control and communication in the animal and the machine". The word cybernetics is drawn from the Greek "*kybernetes*" meaning "steersman," which was the word used by Plato to describe, literally, a ships helmsman, and, metaphorically, the art of government, i.e. steering the ship of state.

Wiener, a mathematician, and Rosenblueth, a physician together with other mathematicians, anthropologists, engineers and so on, were concerned in the 1940's with the study of control and communication in a range of scientific areas. These studies ranged from medicine and weapons systems to computing devices. They recognised "the unity of the set of problems centering about communication, control and statistical mechanics, whether in the machine or living tissue"(16 PG 19). They saw their work as sufficiently different from their original areas of expertise, and sufficiently general in its application, to warrant a title of its own. Through structured research they sought to explore the validity of their ideas and develop new knowledge in the science of cybernetics.

Wiener recognised at an early stage that he and his group had

> "contributed to the initiation of a new science which, ..., embraces technical developments with great possibilities for good and for evil". (16 PG 38).

This chapter will reveal the principles of cybernetics and the possibilities with which Wiener was concerned, but, as with all human knowledge, the principles cannot be denied existence simply because they can, in terms of one person's set of values or ethics, be misapplied. Cyberneticians and their opponents continue to share Wiener's concern that the cybernetic insights may be abused and this is one of the principal criticisms of this approach to management.

3.2 Meaning and role

This thesis is concerned with the application of the science of cybernetics to social systems; that is to say, the management of organisations which are societies, composed of people and existing as the product of their actions, interactions, and of the technical artefacts which link and support them. Early

work, from which the cybernetic principles were developed, addressed such diverse fields as automation, computing and radar and built upon earlier discoveries such as Watt's steam engine governor, which are used to illustrate what Jackson[17 pg 102] has called "Management cybernetics".

Organisational cybernetics builds upon and draws ideas from that fundamental work, but "breaks somewhat with the mechanistic and organismic thinking that typifies management cybernetics"[17 PG 103]. The distinction is drawn by Jackson on the basis of two differences between the work of Stafford Beer and that of others in this field. Firstly, in "The Heart of Enterprise"[1] Beer builds a model of "any organisation" from first principles of cybernetics, and, secondly he pays significant attention to the role of the observer whose presence influences the situation observed. Accepting the intellectual insights of Stafford Beer, it is possible to utilise the principles of cybernetics without entirely relying on analogies between the system observed and other natural phenomena. It can be recognised that the existence and behaviour of the organisation studied is, to some degree, a function of the perceptions of the observer.

Beer defines cybernetics as "the science of effective organisation" and that definition will serve throughout this text as the meaning of organisational cybernetics. That definition and the application of cybernetic principles are intended to help with the problems of organisation discussed in Chapter One. The role of cybernetics is to help the manager (defined as any person legitimately attempting to command and control an organisation) to understand:-

How the system (organisation) works (or doesn't work).

Why it works that way.

> What to do about the organisation to influence the outcome in a way which is beneficial to the perceived purposes being served.

This is because "Cybernetics ..... treats, not things but *ways of behaving* "(18 pg 1).

3.3 Characteristics, Tools and Principles of cybernetics

> "The truths of cybernetics are not conditional on their being derived from some other branch of science"(18 PG 1).

This section will first introduce the major characteristics of systems suitable for the cybernetic approach. Key tools of cybernetics and the principles which they follow will then be introduced. Notwithstanding the above quote from Ross Ashby, a number of the principles have been derived from "some other branch of science" but it is in taking account of the role of the observer that they reflect the essentially cybernetic operation of those natural systems which have been studied. That is to say, that the principles of cybernetics can be seen to operate in nature and to be concerned with "general laws that govern control processes, whatever the nature of the system under governance"(17 PG 92).

3.3.1 Systems: a starting point

Cybernetics is a strand of systems thinking. This way of thinking recognises that a "whole" system exhibits emergent properties that are not to be found in its parts. For example, a ship is a system which will float, while any of its parts or "sub-systems," taken in isolation, will sink. The ability to float is the ship's "emergent property". Similarly, each of the ship's sub-systems has properties which the ship

as the containing system does not. The engine can convert potential energy (fuel) into heat, which can be used to generate steam. The action of the steam on a turbine converts the heat energy to rotary motion which, through an output shaft and propeller, causes the horizontal motion of the ship. The ability of the engine and output shaft to convert potential energy to horizontal motion is not a property to be found in any of its parts or sub-assemblies, or in the ship itself, it is a property of the "engine system" as a whole.

Cybernetics, as with the whole of the systems tradition, takes as its starting point the "Input - Transformation - Output" model. This reflects the idea that a system carries out some activity, the transformation, and is open, i.e. it imports "instructions" (in the form of energy, information, materials etc.) and acts upon those instructions to produce an output. The theoretical basis of cybernetics is that this model allows management, i.e. regulation of the selected inputs-transformation-outputs, to be studied in its own right, the task of management in any particular case being determined by the nature of the system being controlled and the environment in which the system is embedded.

3.3.2 Characteristics of cybernetic systems

While the early studies of Wiener et al. dealt with problems of communication and control in "machines and living tissue", subsequent developments have taken cybernetics into the wider field of management. Beer(19) considers that, in order to be a worthwhile subject for the application of the cybernetic approach, the system will be likely to demonstrate extreme complexity, a degree of self-regulation and probabilistic behaviour. He views organisations as exhibiting these characteristics.

Beer(19 PG 12) designates as "exceedingly complex" a system which is so complicated that it cannot be described in a precise and detailed fashion. To explain this point, the wiring loom of a car is, in Beer's terms, "complex but

describable", its design and connectivity can be, and, in fact, are recorded. An example of an exceedingly complex system would be an interaction between two people in a meeting. This, apparently simple to observe and record, would, in fact, not be describable, because the nuances, inflections of speech and bodily postures adopted all form a part of the transaction. The meeting would, following Clemson(20 PG 19), "have more relevant detail than the given observer can possibly cope with", although increasing the number of observers would, perhaps, counter this.

Self-regulation describes the ability of a system to "manage" itself towards its purposes or goals despite environmental disturbance e.g. maintenance of body temperature. The system behaves in an autonomous manner.

Probabilism exists where there are elements of the system whose behaviour is at least partly random. Returning to the example of the car wiring loom, it is not only "complex but describable," it is also "deterministic." Its behaviour can be known in advance as any given input to the system, e.g. operating a switch, will generate a precisely predictable outcome. This argument assumes that the wiring loom is in working order. The outcome of the meeting between two people would be "probabilistic." This is because, while the agenda for discussion may be known in advance, and a "most likely" outcome predicted the variables in the meeting, such as mood, posture and experience, of the parties, separately and together, make the outcome uncertain.

3.3.3 Cybernetic Tools

The cybernetic tools for dealing with these exceedingly complex, self-regulating, probabilistic systems are:-

0 the *black box* technique - to address extreme complexity.

0 *feedback* - to manage self regulation.

0 *variety engineering* - to handle probabilism.

These will be dealt with in turn.

3.3.3.1 The Black Box Technique

Complexity is the property of the system that the black box technique enables the cybernetician to address. Clemson's definition of complex is (op.cit.), having "more relevant detail than the given observer can possibly cope with". Schoderbek et al.(21 PG 94) consider that complexity is a property of a system, which, when examined from a non-quantitative viewpoint, is the product of the interaction of four main aspects, the number of elements, their interactions, their attributes, and, their degree of organisation. The number of elements refers to the number of sub-systems contained in the system being examined. The interactions describes the richness of the connectivity between those elements. Attributes refers to the individual properties of the elements, that is their particular nature and features. The degree of organisation is the extent to which the interactions and attributes are guided by predetermined rules.

It should be apparent that the interaction of these four "determinants" can generate what would be seen as an exceedingly complex system. As such it

would not lend itself to reductionist analysis, such an approach would "destroy" the system and cause the emergent properties to "disappear". The system then examined would be different from that which was initially identified.

The need to study the system while interfering minimally with its internal operation, leads to the use of the black box technique. This is a way of gaining knowledge about the operations carried out by a system without the need to reduce it to its component parts, this leads to Beer's "First Regulatory Aphorism":-

> "It is not necessary to enter the black box to understand the nature of the function it performs"(1 PG 40).

Essentially the black box technique involves manipulating the inputs to a system and recording the effect on its outputs in order to establish patterns or regularities in its behaviour. As knowledge or understanding of the system is acquired the manipulations can become more structured. The black box technique is shown diagramatically in Figure 3.1.

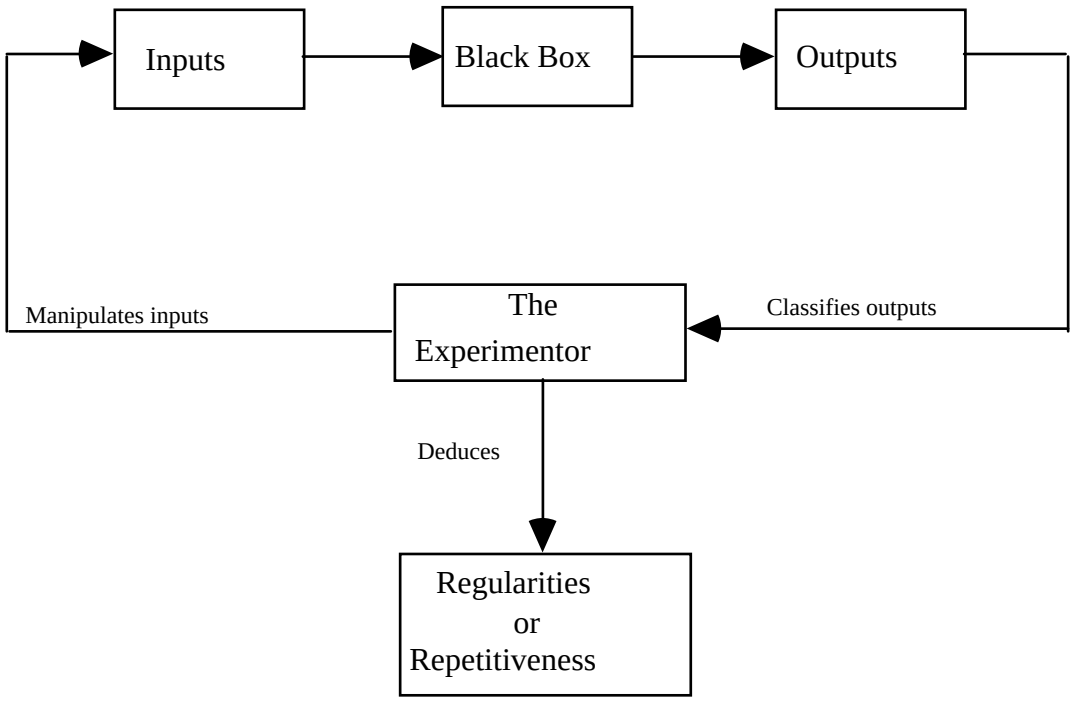

The Black Box Technique

(after Schoderbek et. al. as

adapted by Jackson)

Figure 3.1

Jackson[15] gives the following example, "even though we do not understand the process involved, the following black box is carrying out the transformation 'multiply by 3'."

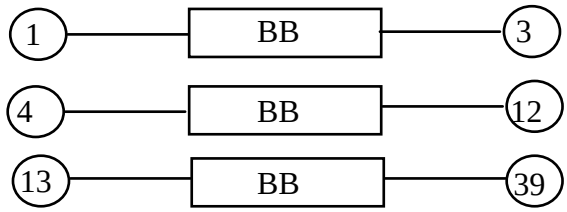

Multiply by 3

From Jackson (15)

Figure 3.2

All people deal with much more complex black boxes than this in their daily lives without ever needing to know or understand how they work. Indeed, the black box technique will never reveal how the transformation process works or how efficient it is. Examples of everyday black boxes are that:-

> Drivers need not know how an engine works in order to drive a vehicle.
>
> I need no understanding of electronics in order to use the computer on which this thesis is being written.
>
> Children need know nothing of the internal workings of a video recorder in order to record and view their favourite programmes.
>
> Finally, parents learn to manage their children (and children their parents) long before they have a common spoken language with which to communicate and explain their actions. Nobody, conventionally classified as sane, would propose a reductionist analysis of a baby to "find out how it works" in order to control it, it is simply managed as a black box.

Managers in organisations perform their tasks in much the same way. If it is not possible for them to grasp the full complexity of the systems which they manage, they must do so by manipulating the inputs to the system, recording the outputs, and deducing patterns of response. These patterns can then be used to inform future actions.

A cautionary note is necessary on the topic of black boxes. Firstly, since it is often not understood how the black box is composed, it is possible that manipulation of

the inputs may change it to such an extent that it will not, or cannot be, returned to its original state for further experiments. A system which is largely composed of people will, to some extent, always change in this way simply because all of those people have memories which will influence (or condition) their response to further changes of input. (See the "Hawthorne" studies).

Secondly, it is vital that enough experiments are conducted on the black box to be sufficiently sure of its behaviour for the purpose being considered. Essentially the greater the number of trials that are conducted the greater the accuracy of prediction.

Thirdly, ill-considered random experimentation with a black box may have disastrous consequences, for example, a child inserting a screwdriver in the back of a radio to "find out how it works" and receiving an electric shock, or, a teenager joyriding in a powerful car to "explore its behaviour."

Notwithstanding these dangers, the black box technique is important to Managers. Knowingly or unknowingly, they have to use it all of the time, if they are not to become immersed in a flood of detail that they have neither time nor inclination to assimilate.

3.3.3.2 Feedback

Feedback is viewed as the mechanism of self-regulation and describes "circular causal processes"[20 PG 22]. Self-regulation occurs in both the organisation and its environment and is consequently of major importance. If it is not understood that an exceedingly complex probabilistic system, to some extent, regulates itself, and how this occurs, then the predictability of the outcomes of managerial actions, in relation to that system, is reduced. Self-regulation generates a degree of stability, but, if an intervention is undertaken, either in an organisation or by an

organisation in its environment, this stability may be disturbed. If the "circular causal chains" have not been adequately understood then the intervention may produce unmanageable instability.

The simplest form of feedback occurs when two elements continuously interact with each other such that the output of one determines the next action of the other. There are two types of this "first order" feedback behaviour. In the first, negative feedback or goal seeking behaviour, the system will resist disturbances that take it away from its goal. That is to say that the reaction of the one element is to inhibit the change in the other and vice versa.

An early example of this is the governor on Watt's steam engine. This is described by Beer(19 PG 29) as follows:-

> "An engine turns at an increasing speed; with it turn weighted arms, also at an increasing speed; the arms are mounted on pivots so that they are free to rise by centrifugal force as they revolve; the arms operate a valve which admits power to the engine, so that the valve is closed in proportion as the arms rise and the speed grows. Hence we have a homeostat: the more the machine tends to exceed a given speed, the less it is supplied with energy to do so; while should it fail to reach this given speed its energy supplies will be increased until it does. Thus the desired output is attained by self-regulation; the input to the machine is adjusted by the output itself and both settle down to steady operation".

This example displays the four elements necessary to an effective, if simple, closed-loop feedback system:-

A desired goal - the speed of the engine.

A sensor - the weighted arms.

A comparator - centrifugal force.

An activator - the valve.

A most common example today is the thermostatic control of a heating or air conditioning system, the thermostat switching the system on and off in order to maintain a given temperature. These cases have two things in common, firstly, they are examples of negative feedback, that is, the operation of the system is designed to ensure stability. Secondly, they are first order feedback systems, that is, the goal of the system is determined externally to it.

The opposite of negative feedback is positive feedback. In this case, deviation by one element will be amplified rather than reduced by the action of another. These systems whilst potentially highly unstable are also useful. Beer(19 PG 31) refers to the action of power assisted brakes where the small action of moving the pedal is amplified by the braking system "until the force applied is capable of stopping a vehicle in motion".

A second order feedback system is capable of choosing between a variety of responses to environmental changes in order to achieve its goal. A third order system, is still more sophisticated in that it is capable of changing the goal state itself in response to feedback processes, determining the goal internally as opposed to externally in the first and second order systems. Figure 3.3 shows an example of a closed-loop feedback system.

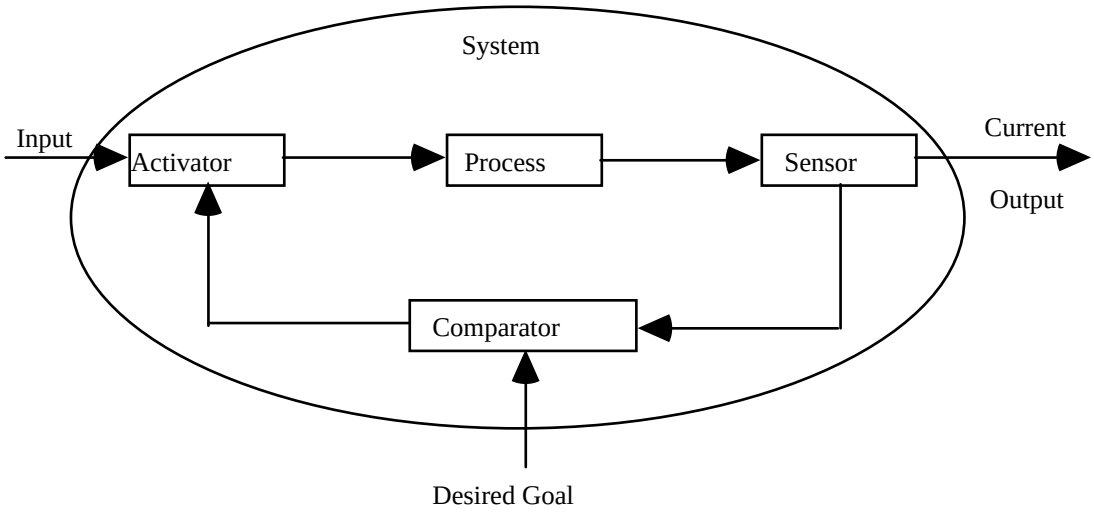

A Closed-Loop First Order Feedback System

Figure 3.3

This description of feedback has so far dealt with simple situations. In organisations the feedback systems may be highly complex containing large numbers of elements, connected in a number of ways and consisting of both positive and negative loops. It may also be the case that at any time the "sum" of the loops may operate in a positive or negative manner. Clemson(20 PG 23) refers to the effect of success or failure on the action of athletics teams:-

> "Given two teams that are roughly evenly matched, if one team plays very well and begins to pull slightly ahead, the other team is stimulated to greater effort and tends to catch up, i.e. the two function as a negative loop in minimising the score difference between them. However, suppose one team is having a horrible night and gets completely demoralised in the first ten minutes. As the game goes on and they get more and more hopelessly behind they will tend to play less and less well and the better team will relax and everything will go right for them. In this case, the two teams are functioning so

> that the overall feedback loop is positive in maximising the score difference."

Clemson then draws the point from this that:-

> "... there is nothing structural or in the "essence" of the system, about whether the loop is positive or negative."

Ultimately, systems that include feedback loops are capable of demonstrating exceedingly complex behaviour, and large changes in that behaviour may be brought about by small changes in the internal relationships.

Beer(19 PG 29) considers that two aspects of vital importance emerge from the concept of negative feedback. The first is that, provided the mechanism does not break, the system cannot go out of control since in the process of so doing it will correct itself. The second is that the system is guaranteed to be effective, not only against a particular kind of disturbance, but against any disturbance. Thus, in the engine governor example, the system will operate to control engine speed regardless of whether the system state has altered because of an increase in boiler pressure, the approach to an incline, a reduction in the energy level supplied to the boiler or any other disturbance. The simple system will keep in order a large number of possible sources of variation, some of which could be regarded as being outside the simple governor system, a part of its environment.

There are a number of design criteria for effective feedback systems, these are:-

> All the elements of the system must be working properly and the communication channels between them must be adequate.

In an organisation, responsibility for action, (which carries with it accountability), must be clearly allocated.

Controls must be selective.

The control should highlight the necessary action.

These points will be further elaborated in the section on principles and in the exposition of the Viable System Model in Chapter Four.

3.3.3.3 Variety Engineering

Variety engineering is the process of matching the variety of the controller to that which is to be controlled, and is used to deal with probabilistic behaviour. Variety is the measure of complexity, that is, the number of possible states of the system; probabilistic behaviour exists when the behaviour of some of the elements of the system is considered to be at least partly random. It was shown in Chapter One that the variety (complexity) of the world is increasing as the possible number of actions and interactions increases. A principal argument of cybernetics is that the mechanisms that are used to manage this complexity must answer to Ashby's "Law of Requisite Variety." This law states that "only variety can destroy variety." This means that, in order to effectively manage a situation, the "management unit" must command as much variety as the "operation(s)" it seeks to control.

Variety engineering consists of the two prime methods of achieving this, either, reducing the variety of the system to be controlled (variety reduction), or, increasing the variety of the management unit (variety amplification). This process must be undertaken in a manner which is suitable for the particular organisation being managed and should contribute to the achievement of its goals. There are a number of management techniques which are in common use and may be seen as

the tools of variety engineering if employed appropriately. They need to be used thoughtfully and with full awareness of their possible consequences, rather than randomly, or politically, as often seems to happen in organisations.

The tools for reducing the variety faced by managers are:-

Structural - e.g. delegation (autonomy or decentralisation), functionalisation or divisionalisation.

Planning - e.g. establishing objectives and priorities.

Operational - e.g. budgeting, management by exception.

Rules and policies - e.g. instructions and "norms" of behaviour.

Managers may amplify their variety through the following approaches:-

Structural - e.g. team work, groups, etc.

Augmentation - e.g. recruit/train experts, employ independent experts.

Information Management - e.g. management or executive information systems (which may also act as attenuators).

Actions or processes that work to reduce the variety faced by managers are known as filters or attenuators, whilst those which act to increase the variety of the manager are amplifiers.

3.3.4 Principles of Cybernetics

The principles of management cybernetics may now be stated as general abstractions from the characteristics and tools of cybernetic systems.

The Systems principle.

Any system has emergent properties that are possessed by none of its parts, each part has properties not possessed by the whole. The manager should seek to deal with the whole system of interest and not the parts.

The Black Box principle.

No exceedingly complex system can be known completely, yet the manager may learn to control it through a systematic process of manipulating its inputs and classifying its outputs. It is not necessary to enter the black box in order to do this.

The principle of Self-regulation.

A complex system may be expected to exhibit a degree of self-regulation arising through feedback loops within itself and between it and its environment. The sum of the feedback loops may be either positive or negative and there is nothing in the structure or the "essence" of the system that determines this.

The Law of Requisite Variety.

"Only variety can destroy variety". This law, elucidated by Ross Ashby, states that the variety of the "controller" must be equal to that which is to be controlled in order to be an effective regulator.

This section has reviewed the characteristics, tools and principles of management cybernetics. The next section will relate these to the dominant models for management.

3.4 Dominant models and cybernetics.

Each of the dominant models for organisation can be seen to exhibit some cybernetic characteristics. Robb(22) considers that what he saw as the three schools, Classical theory, Management Science and Organisational Management Theory, "lead towards the adoption of a cybernetic view of the large, though probably not the small, organisation." Classical theory and Management Science are considered to represent the "machine" model and Organisational Management Theory the Human Relations, "organic" model.

3.4.1

The "machine" model, as with cybernetics, recognises the need for authority, communication and control, but sees the organisation as totally definable with responsibility clearly allocated to managers. Communication and control in this model descend from management to workers and the information network is simple and deterministic. Formal communication channels follow the hierarchy, and cross hierarchy transactions are subject to tightly prescribed rules that render such transactions meaningless, e.g. Fayol's acceptance that staff could "treat directly"

provided that they had their superior's permission, kept them informed and provided that they were in agreement. For simple operational matters this may be adequate but meaningful debate under these rules is impossible.

Cybernetics suggests that the information network is vastly more complex than the rigid hierarchy indicates and emphasises the need to understand the nature of the relationships between managers. These relationships and the dialogues on which they are based are seen by cybernetics as "complex conversations at a number of levels between just two or more individuals."(22)

Authority (command and control) is seen in the "machine" model as vested in the managers by right of appointment to that position. Cybernetics questions this, suggesting that authority and responsibility are products of the structure of the system and can be distributed according to the will of the people within the system, albeit, the "natural leader" may distort the intentions of the people to his/her view.

Goedel's incompleteness theorem further challenges the "machine" model, which treats humans as deterministic machine parts. The theorem is that, "All consistent axiomatic foundations of number theory include undecidable propositions."(20 PG 207) This is seen by Beer(19 PG 71) as indicating that some propositions can "in principle be neither proved nor refuted within the limits of its own language." Robb(22) sees the inference of this as being that the theory of the "machine" model is unprovable because of its assumption about the nature of people "not because humans are more than this but because it is impossible to prove the consistency of a formal system from within the system itself."

Robb proposes that the most obvious link between the "machine" model and cybernetics is the reliance on feedback, a concept with which all managers are likely to be familiar. He indicates that cybernetics adds to the established view a recognition that there should be feedback of a "significant kind about the effects

which every management decision produces." He sees this as the key to adaptation and learning by the metasystem. He states that:-

> "In large organisations this closure is very difficult to obtain because at lower levels in the organisation there is a convergent tendency, that is one determined to feed back supportive information."

This attenuation and filtering will be familiar to most Managers, being a cybernetic restatement of the tendency to "tell the boss what he wants to hear." The "machine" model demands that the organisation runs like this, allowing no scope for unpredicted or undesirable outcomes. This tendency hides the apparent truth about the organisation from those who need it most and is a product of the way the organisation is perceived.

3.4.2

Cybernetics also has a close link with Human Relations theory or the "organic" view. Cybernetics accepts that humans are "exceedingly complex, self-regulating and probabilistic," that is, they exhibit the three characteristics of systems, which according to Beer, are suitable for cybernetic enquiry. Cybernetics also recognises that the human being interacts with other systems, both human and social, in different ways and at different logical levels, playing a variety of roles and parts dependent upon systemic and environmental circumstances. It is proposed that cybernetics can help to explore and understand the interactions of people and organisations, viewing the organisation as "the meeting point of a number of interacting social, managerial, economic and political systems."(22)

3.4.3

This section has attempted to show the clear links between the structure and purposes of the dominant models and how the tools and principles of cybernetics can add to and develop those approaches. The next section will draw the distinction between Management and Organisational cybernetics.

3.5 "Management" and "Organisational" Cybernetics

Management cybernetics is considered by some, e.g. Clemson and Jackson, as not being a significant advance on the "machine" model. Early work in this field relied heavily on analogies for illustration and for some Cyberneticians the organisation came to be seen as a "machine" or "organism". This "Management cybernetics" still saw the goals and purposes of the system as imposed from outside and regulated according to the feedback principle by management. The tools, such as "the black box technique" and "self-regulation" were used to gain knowledge of system behaviour. The concept of "variety" was largely ignored, as was the impact of the observer on the observed.

Organisational cybernetics was developed from this, principally by Stafford Beer and two of his followers, Espejo and Clemson. Organisational cybernetics rests upon two differences in approach between Beer and others. Firstly, Beer has built his Viable System Model from cybernetic first principles in "The Heart of Enterprise"(1) dispensing with the use of analogy. Secondly Beer pays great attention to the role of the observer in defining the system, its purpose and its design, although this is understated in the current methodologies for its use.

Beer's approach is seen by Jackson(15) as enabling the cybernetic laws to be understood in their own right instead of only in the context of an analogy, and, as enabling the study of "relativistic organised complexity" because it studies the observing system as well. This approach is seen by Clemson(20) as representing

second order cybernetics as opposed to the first order cybernetics of the early approach.

3.6 Summary

This chapter has introduced the science of cybernetics and reviewed its origins and development. The key tools and characteristics of the approach have been revealed and briefly related to the dominant models. Finally a distinction has been drawn between management and organisational cybernetics.

The next chapter will introduce Beer's Viable System Model and show how this draws from and develops the ideas and tools of cybernetics.

Chapter Four

The Viable System Model:
Conception, Construction and Methodology

This chapter will introduce the Viable System Model and show how this utilises and develops the cybernetic principles discussed in Chapter Three. The second part of the chapter will review the established methodology for the use of the model.

Terms used throughout this chapter are explained in the glossary of cybernetic terms.

4.1 The Nature of the Model

Beer considers that the conventional organisation chart and the dominant structures and processes of organisation are unsatisfactory approaches for management. Chapter Two reviewed the dominant models and demonstrated faults on which some of Beer's criticisms could rest; other criticisms concerned the nature of information, communication and the distribution of power and authority. Chapter Three introduced the science of Cybernetics upon the principles of which the Viable System Model is founded, this chapter fully reveals that model.

Beer contends that if organisations are to adapt and survive in the contemporary environment then they must answer to those cybernetic criteria that have been detailed and which may be considered to be effective in nature. Through more than twenty years as a practising manager, operational researcher and cybernetician, he developed his approach to these "faults", aiming to construct a

more useful and practical alternative. This work reached maturity in the development of the Viable System Model (VSM).

The VSM is an observer dependent, general model of any organisation. It consists of a set of five sub-systems, each of equal importance to the viability of the organisation. These sub-systems are richly interconnected by a network of information loops in continuous operation. The whole system is designed to be capable of learning and adaptation. The five sub-systems are Implementation, Co-ordination, Control, Planning and Policy.

The model attempts to deal with the underlying nature and identity of a system, and concerns itself with the mechanisms of adaptation, communication and control in that system. Whilst Co-ordination and Control mechanisms ensure cohesion of the whole, the model encourages the grant of the maximum autonomy commensurate with systemic cohesion at the level of Implementation. This maximises use of the self-regulating tendencies of complex systems and enables problems to be resolved as closely as possible to where they arise. This is seen as generating two outcomes, firstly, greater motivation at lower levels and, secondly, enabling higher management to concentrate on their most relevant functions. The model perceives the organisation as open to its environment through its Planning function, both influencing it and being influenced by it. The Policy function is responsible for the whole system, creating and representing its identity and arbitrating between the potentially conflicting demands within the system for stability and change.

The Viable System Model is useful for systems exhibiting purposeful behaviour. The purpose is considered to be observer dependent, thus the purpose of the organisation, even its very existence, is seen as a function of the perception of the observer rather than being an objective statement about the system. For example, a rainbow is an observer dependent system. It exists as a result of the action of light through water droplets, but, it can only be observed from the outside, and when approached, it disappears; it is a mirage. While we cannot

grasp or physically handle a rainbow, we can describe it and understand how it is structured; and yet, if we look at the same area of the sky from a different angle, the rainbow isn't there. Another example is to consider a physical entity such as the City of Kowloon (Nine Dragons) in Hong Kong. There is only one Kowloon, yet, consideration of it from a vantage point on each of its surrounding eight hills would generate different descriptions of its "objective reality." Each of these descriptions would be "right" for the particular observer and viewpoint, but each would describe an apparently different "reality." The ninth dragon is the set of eight hills taken together - a containing system!

For Beer, "the nature and the purpose of a System are recognised by an observer within his perception of WHAT THE SYSTEM DOES"(sic).(1 PG 9) The observer's perception is informed by how he sees the system and, this is, in turn, prejudiced by his past experience, personal desires and expectations. This means that, even if the System is studied by different people from precisely the same place, different aspects of the system will be highlighted. For example, examining Kowloon through a set of binoculars from a hilltop will reveal different sights to different people; an Architect may see buildings, a Town Planner the roads and an Anthropologist the people.

The VSM is an artificial intellectual construct; it provides, not a set of facts about a particular organisation, but a way of thinking about organisation itself. Through this it offers ways of making any particular perceived organisation more effective. In reading the following description then it is important to remember that:

> "you are not determining absolute facts:
> you are establishing a set of conventions"(3 PG 2).

These conventions cover both the diagrams and the language used to describe the organisation.

4.2 The Organisation in its Environment

The starting point for the VSM is that any organisation exists in an environment with which it interacts. That is, it is both influenced by, and seeks to influence, its environment. Its operations are contained within the environment and those operations contain a management function. This is shown diagramatically in Figure 4.1, the cloud shape representing the environment, the circle the operations, and the square, the management function.

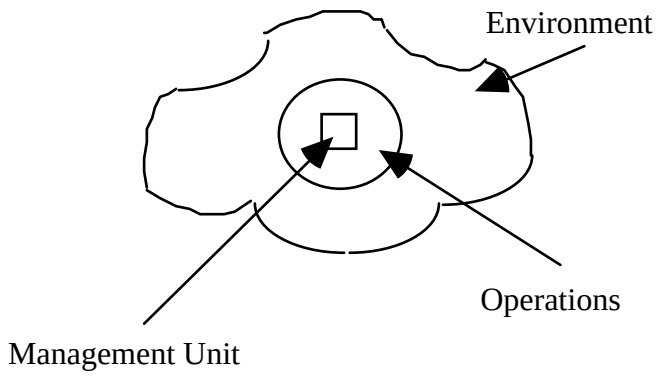

The Organisation in its Environment

adapted from Beer (1 PG 94)

Figure 4.1

Environment is the term used to describe all of the external factors interacting with the organisation. The aspects of the environment that are of relevance depend upon the particular organisation being studied and the purposes to be served, but would be expected to include legal and government issues, market forces, customers, suppliers, demographic and other external influences. The operations are the things which the organisation does, i.e. its purposes. Management is what enables the operations.

Interaction is through communication channels which link the environment to the operations and the operations to the management. While diagramatically these links are shown as discrete communication channels, the process is seen by Beer(1 PG 95) as more like diffusion, the discretely drawn boundaries being "porous membranes" rather than walls. Beer proposes that the channels are "variety exchangers" and that the variety of the environment is greater than that of the operations which in turn exceeds that of the management unit. The channels represent the diffusion process of these differing varieties. The Law of Requisite Variety, "only variety can destroy variety", demands that variety will tend to equate throughout the system and this leads Beer to enunciate his "First Principle of Organisation":-

> "Managerial, operational and environmental varieties, diffusing through an institutional system, tend to equate; they should be *designed* to do so with minimal damage to people and to cost."

This means that, rather than allowing variety amplifiers and attenuators to grow in a random fashion on the communication channels, they need to be designed so that only relevant and necessary information is carried across the boundaries. Beer sees the limiting case of unconstrained growth in attenuators as "that attenuating filter called Sheer Ignorance"(1 PG 96), in that case he considers that management will be a farce. He proposes that rather than allowing this to happen, filters and amplifiers need to be built into each of the channels to increase the performance level of each element to enable it to cope with the variety generating capability of the system in which it is contained. Figure 4.2 shows the communication channels with the amplifiers and attenuators represented by standard electrical symbols.

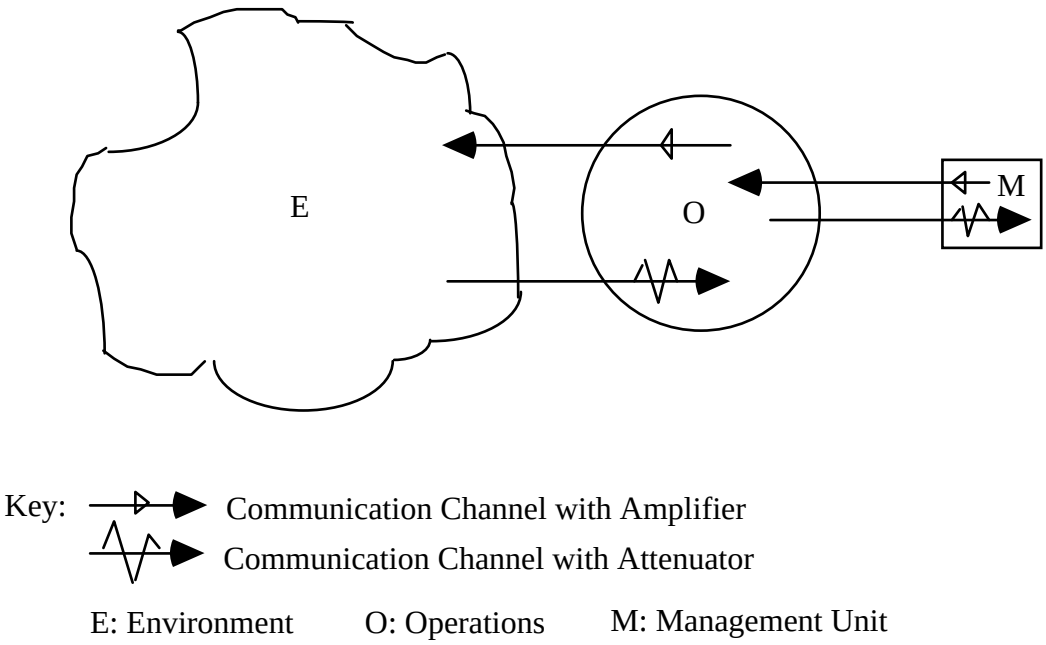

The Environment, Operations and Management unit separated to reveal the communication channels.

Figure 4.2

Beer elaborates two further Principles of Organisation in connection with these communication channels. The "Second Principle of Organisation" is:-

> "The four directional channels carrying information between the management unit, the operation and the environment must each have a higher capacity to transmit a given amount of information relevant to variety selection in a given time than the originating sub-system has to generate it in that time."

Beer(1 PG 99) explains this principle as follows:

> "Clearly, in a dynamic system, there is a minimal time in which all possible states could be exhibited, and therefore

> there is a *rate* (sic) of variety generation possible per unit time."

The reminder is then given that channel capacity refers to the ability of the channel to discriminate between states rather than its capacity to transmit "*content* ". He continues:

> "A channel carrying a message in the morse code has to distinguish a variety of five states: the dot and the dash; and the pause that separates them within a letter, from the pause between letters, from the pause between words. It makes no difference whether the information conveyed is a declaration of war or a grocery order".

The point of the Second Principle in a management system is to consider whether "the channel has sufficient variety to register the number of states it is supposed to transmit at a given rate"(1 PG 99).

The "Third Principle of Organisation," concerning information "crossing boundaries" between the units, is:

> "Wherever the information carried on a channel capable of distinguishing a given variety crosses a boundary, it undergoes transduction; and the variety of the transducer must be at least equivalent to the variety of the channel."

Communication between the environment, the operation and the management unit requires information to cross the boundaries between them. The "language" of each sub-system is considered to be unique to it and it is therefore necessary for the message to be translated on crossing the boundary from the language of the sender to that of the receiving sub-system. The mechanism that does this is

called a transducer. It should be apparent that the transducer must be able to distinguish at least as many states as the communication channel can convey. A transducer that cannot do this will act as a variety attenuator, any message becoming denatured or distorted and the transducer failing in its purpose. Similarly, it must be remembered that since some information will always be lost in translation it is essential to minimise the number of translations.

This section has established the Viable System view that an organisation, consisting in essence, of operations and an enabling contained management unit, exists in dynamic interaction with an environment. To be effectively organised, adequate communication channels using variety amplifiers and attenuators must convey information between the three sub-systems. This process relys on competent transducers at the boundaries to translate information into a language which can be understood by the receiving sub-system.

The section has shown the application of cybernetic tools; the use of **feedback** loops, i.e. the communication channels, to create "homeostats" between the embedded sub-systems which should lead to a degree of **self regulation**. Nothing has been said about the specific contents of the sub-systems, they are **black boxes**. The amplifiers and attenuators on the communication channels are the tools of **variety engineering**, always bearing in mind the information losses incurred in translation. The basic view can now be developed to elaborate the full model.

4.3 <u>System One</u>

"The purpose of a system is what it does."

This "key aphorism"(3 PG 99) describes "Implementation," the purposeful actions of the system. System One consists of the set of operational sub-systems of the

organisation. Each of these sub-systems is composed of an operations unit and a management unit in interaction with a local, or operation specific, environment. That is, each System One element at any particular level of resolution may be represented as Figure 4.2.

For an organisation these elements will be the "productive" parts, e.g. the branches of a Bank, the factories of a manufacturing company, the sales territories of a direct sales operation. At a higher organisational level they may be subsidiaries or divisions. At the lowest practical level of organisation they are people.

The model recognises that these elements will necessarily interact with each other, exchanging information about relevant issues. If, for example, the elements are different stages in a production process they will need to exchange information in order to enable the process to flow from one element to the next. Similarly, an element may need to advise a predecessor in the sequence of a problem or an opportunity. These interactions are represented in the model by the "squiggly" lines shown in figure 4.3 linking the operational units. While in figure 4.3 the elements are shown in a column, this is merely a diagrammatic convention, not an indication that any System One element is either superior to or necessarily precedes another.

The elements of System One, depend from a Senior Management unit, known as the metasystem. That unit is logically, rather than hierarchically, senior to the System One elements. That is to say that the Senior Management unit has an overview of the whole of System One which is not available to any of the elements individually. It transacts its business in a metalanguage to decide propositions which are undecidable at the operations level. These features enable the metasystem to deal with conflicts arising between the operational elements. The management units of the System One elements are each directly connected to the metasystem through three communication channels.

The first channel is for Legal and Corporate requirements. This deals with those aspects which constrain System One to belong to the overall system. For a Company the legal constraints will be the Memorandum and Articles of Association and provisions of various Companies Acts or other current legislation relating to companies. The Corporate Requirements are Company Rules and Procedures which are intended to control the behaviour of the division or subsidiary.

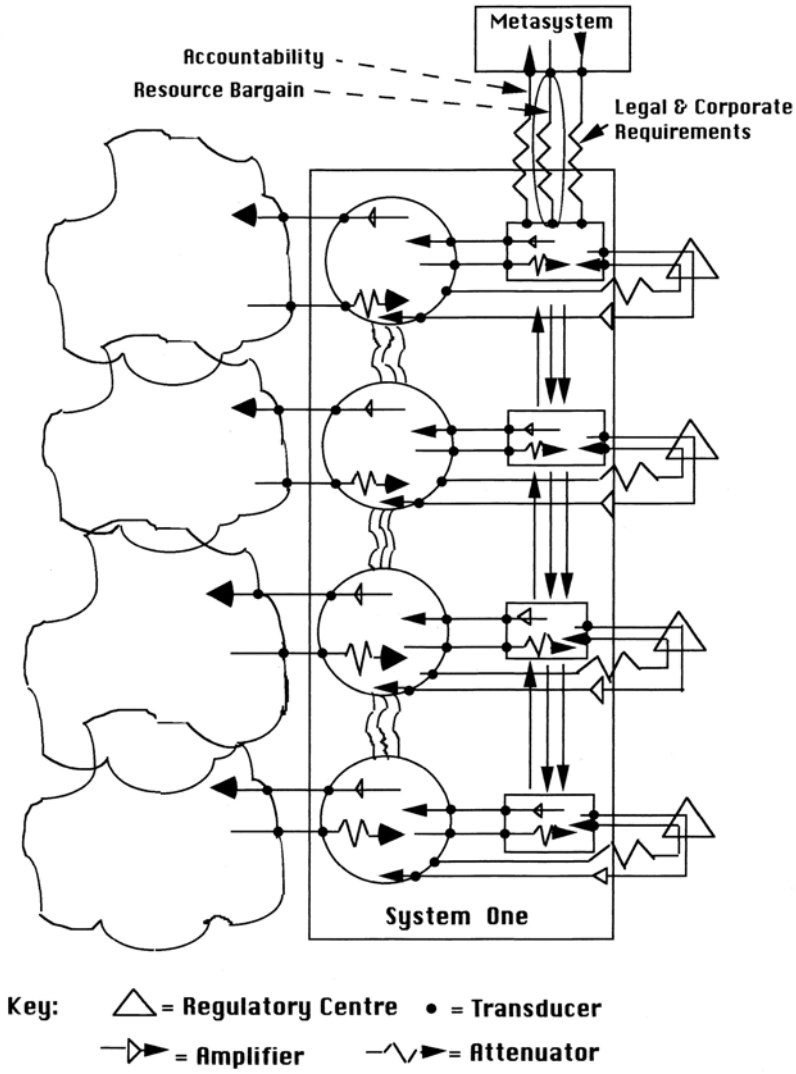

System One with local regulatory centres

Figure 4.3

79

System One with local regulatory centres

Figure 4.3

The second channel, carrying the information that constitutes the Resource Bargain, is considered to represent the agreement or "deal" between the individual System One element managements and the Senior Management. The Resource Bargain determines the degree of autonomy which the element is permitted within the constraints of the wider system to which it belongs. Typically it will constrain the System One element, through a process of negotiation, to only engage in particular activities and will determine the level of resources which the metasystem will provide to enable those activities to be carried out. This negotiation is seen as a dynamic process and is depicted in Figure 4.3 by the homeostatic loop joining the transducers at the boundaries of the boxes. Dynamic means that the negotiation is not a once and forever agreement but a continuing dialogue between the units in which the activities and resources are continuously under review.

While described as a negotiation process, a Resource Bargain by unilateral dictat is still a Resource Bargain, even though this may threaten the longer term viability of the organisation. Individuals, in most organisations, retain the freedom to leave if they are, or feel oppressed and "the heart of enterprise is the human being"[1 PG 42]. It is after all people not organisations that make decisions.

The third, or Accountability, channel carries to the Metasystem reports of how System One has utilised its resources to fulfil its purposes. Beer[3 PG 40] considers that "accountability is an attenuation of high variety happenings." He perceives that the metasystem will not have requisite variety to deal with all of the data provided to it, in the form of "totals, averages, key indicators" and consequently, in the usual case, "System One .... simply is not accountable." This lack of accountability is handled in the VSM through the "Regulatory Centre" which exists as a service to System One.

Each System One element has its own Regulatory Centre which amplifies managerial variety to the operations and attenuates operational variety to

management. This is achieved by elaborating the basic framework of the resource bargain between management and operations and ensuring that operational potential is harnessed to the achievement of agreed objectives. This is depicted in Figure 4.3 by the triangles and their communication channels.

Beer (3 PG 42) contends that the regulatory activities should have physical embodiment in the organisation and provides as an example, a production schedule in a manufacturing organisation. This amplifies the Resource Bargain which "'knows' we can make 1000 units this month" into a production schedule, this occurring on the loop between operations and management.

This completes the exposition of System One which is the set of operational elements and management units, each with its own regulatory centre and which taken together fulfil the purpose of the organisation.

4.4 System Two

Conflicts and oscillations arise between the elements of System One because the management of any one element must inevitably act in at least partial ignorance of the activities of the other elements and may therefore take actions which interfere with them. All elements may be interfering with each other in this way, and each will be continuously attempting to adjust to each of the others, this is "oscillation" or "hunting." A mechanism is necessary to inhibit this.

System Two is the overall sub-system which links all regulatory activity of the individual elements to each other and to the Senior Management. This, a service to System One, ensures that the conflicts and oscillations occurring between System One elements are damped to inhibit oscillation which could lead to resonation and fragmentation. Beer(3 PG 69) gives as "the most accessible

example of a System Two, a school timetable." He gives as the main considerations these thoughts (italics, parentheses and capitals are Beer's) :-

> "However you describe the System One of a school or a university, its departments or its faculties or its courses or its classes are each pursuing (correctly so) selfish ends which engage them in competition for scarce resources - notably staff but also other facilities.
>
> If each System One element were to determine its own programme unilaterally, then the whole plan for the future would be rife with 'double-booking.' The TIMETABLE takes care of this.
>
> The timetable *reflects* managerial policies and decisions, but does not *make* them.
>
> It is accepted as authoritative throughout System One, because it does not seize authority, but is gratefully accepted as a *service.*
>
> The timetable is rigid in routine circumstances and is therefore a most convenient variety attenuator.
>
> (Were it not for this, teachers would have no time to do anything except negotiate with each other).
>
> The timetable is flexible whenever an element of System One is under duress
>
> (if not, a teacher could not go for emergency dental treatment, say)

and its adaptations are *not then regarded as autocratic.* "

Beer regards this as a "remarkable fact."

System Two and its organisational embodiment does not have higher status than System One. It performs a different function and has a wider view of all of the activities of System One, which gives it power through knowledge. However, if it is to act in a System Two (co-ordination) capacity preserving System One autonomy, and not as a part of the Senior Management on the command channels, its activities must be limited to those which are anti-oscillatory. Beer gives as further examples, the "attitude" to health and safety, the personnel ethos, house style, salary and company car policies.

Commonly, the need for System Two activity is recognised, but is made explicit through the command channels of the organisation rather than through anti-oscillatory behaviour. For example, salary policies become enshrined in manuals and tables stating at what age an individual with a given set of qualifications and experience can receive a certain salary or a particular "perk" of employment. This has been seen by the author to generate absurd results, high potential staff of an organisation being told that, "Now that you have received this promotion you cannot expect further promotion for a number of years, regardless of performance at the task, because *you are far too young for your grade."* The System Two activity of absorbing salary oscillations between operational elements has been denatured to become a rigid command of the organisation, issued by a party without the "right" to give such a command and limiting the autonomy of the System One Manager to manage his unit.

In summary, System Two is any anti-oscillatory activity within the System being studied. Accountability and command authority do not reside in System Two. It is a system operating outside the Resource and Accountability loops to minimise conflicts between System One elements as a service solely to them.

4.5 System Three*

Before commencing the full exposition of the Metasystem, one final vertical link between it and System One needs to be elaborated. This is System Three*, an audit function amplifying variety from the operations level to the Metasystem.

Beer(3 PG 82), states that the five vertical communication channels so far reviewed operate on a routine basis. He asks, "what happens if what the management most needs to know is FILTERED OUT (by the use of totals, averages, and so on)?" Beer contends that poor managements will attempt to restore, or achieve, a variety balance on the command channels by invigilating "the horizontal activities with all the zeal of an Inquisition" and suggests that rather than doing this there exist a "whole set of acceptable management practices that do not involve this centralisation of manifest power".

These practices are various forms of audit, e.g. financial, personnel, consultant review, which operate "sporadically" by intervening directly in the Operations, with the agreement of System One, and amplify Operational variety directly to the Metasystem.

Great emphasis is placed on the sporadic nature of an effective audit, a "routine" audit being likely to reveal nothing of value. Beer(3 PG 85) gives the following example:

"..... routine and regular audits surrender a large part of the variety they generate to no purpose whatsoever. Think of the way in which WW2 Prisoners-of-war escaped from Germany, by doing their digging in the gaps between rigorous patrolling....."

Figure 4.4 shows the Viable System Model including Systems Two and Three*.

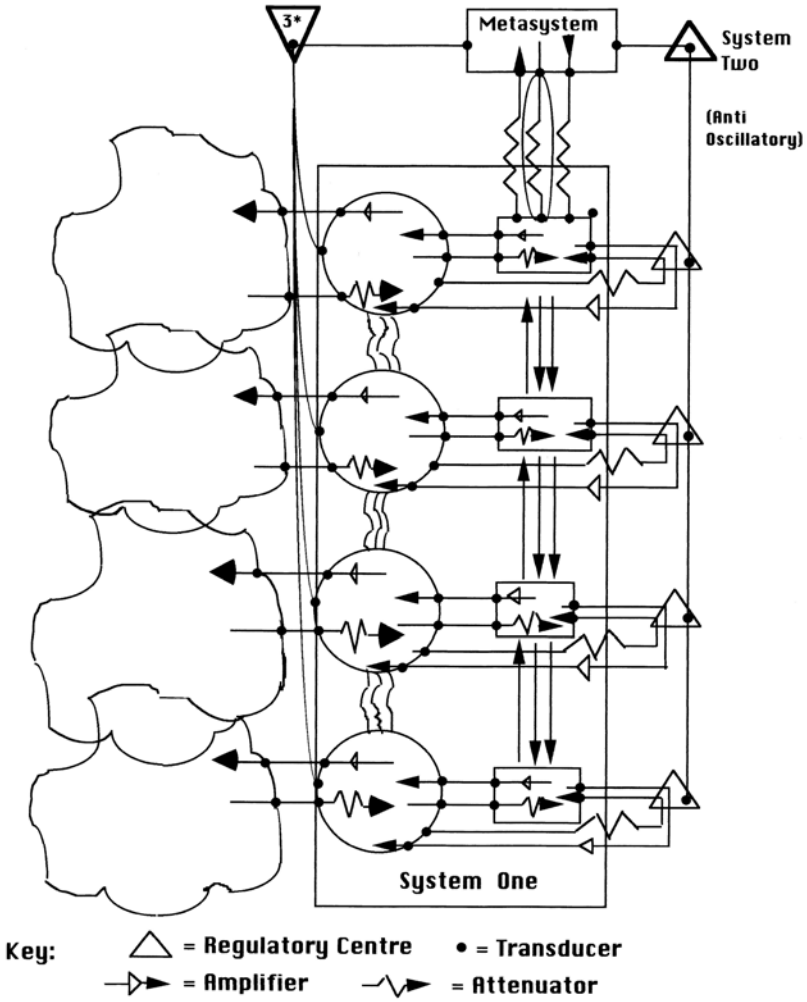

Systems One, Two and Three*

Figure 4.4

Systems One, Two and Three*

Figure 4.4

4.6 Senior Management: The Metasystem

Chapter Three introduced Goedel's incompleteness theorem, seen by Beer as indicating that a particular proposition may be neither proved nor disproved within the language in which it is expressed. Goedel, cited by Beer(18 PG 71), uses the following example: " 'What this sentence says cannot be proved.' If this proposition can be proved, then it is impossible to prove it; but if the proposition can be disproved, then it follows that it can after all be proved."

The elements of System One conduct their transactions with the environment and each other in a language which is specific to them. From Goedel, it follows that propositions will arise which they are unable to resolve. Within the limits of the System One language they will be undecidable. This suggests the need for a metasystem, conducting its transactions in a metalanguage, i.e. a system and language of a higher logical order, and able to decide that which is undecidable at the System One level. This, logically necessary, system is the Senior Management and is composed of System Three (Control), System Four (Planning) and System Five (Policy).

4.7 System Three

System Three is that aspect of the Senior Management which manages all the internal aspects of the system so far elaborated. Unlike the individual System One element managements, System Three deals with the whole of System One, negotiating Resource Bargains and Accountabilities, and being responsible for the anti-oscillatory activity of System Two and the sporadic interventions of System Three*. It is described by Beer(3 PG 86) as being "responsible for the *internal* and *immediate* functions of the enterprise: its 'here and now', day-to-day management."

Beer also refers to System Three as an "Operations Directorate", composed of those parts of the organisation which enable and control the purposeful behaviour of System One. It is important to recall at this point that while System Three must intervene in the autonomy of System One this should be at a minimum level "consistent with cohesiveness within the purposes of the viable system."(1 PG 202)

The particular organisational aspects which create System Three cannot necessarily be found as features of an organisation chart. It will be remembered that System Three, negotiates a Resource Bargain with System One, passes down legal and corporate requirements and monitors behaviour (accountability). It is the processes and features which enable these things to be done which create System Three. These may include, for example, a sales management function, a production or manufacturing management function, management accounting, and a personnel function together with their necessary supporting services and procedures, most of which should operate substantially through Systems Two & Three* rather than through the command channels in order to maximise the "sense" of autonomy at the operational level. Before proceeding from this stage it is worthwhile to remember that no one of the five sub-systems within the model is more important than any other, they are each necessary and the absence or ineffectiveness of one threatens the viability of the whole system being studied.

While System One produces the viable system, ("What the system does is done by System One")(3 PG 128) and System Two is necessary to damp oscillations between System One elements, System Three occupies a position of "intrasystemic omniscience"(3 PG 92). It has a synoptic view of System One and is logically necessary to manage the System One activities from that privileged position. Beer(3 PG 92) stresses this issue:

> "System Three is not constructed as a box to house people with better suits and bigger cars than anyone else. That they

> do have these things is simply the result of a general acquiescence in the hierarchical concept." .....
>
> ..... "Go and look into a monastery if you doubt this. System Three still works without the perks. But in real (?)(*sic*) life it suits the greedy to acquiesce in greed: their turn (they hope) will come."

The argument for autonomy at System One is an endeavour to maximise the use of the tendency to self-regulation of complex systems. This is seen as enhancing efficiency within the system. The argument for System Three is that it is not itself purposeful but rather it is supportive to, or enabling of, the achievement of the System's purpose. In consequence it should not consume more of the organisation's resources than are necessary to enable it to fulfil that supporting role.

It is frequently the case that the Departments and people which constitute the System Three of an organisation do not recognise their role as supportive. They do consider themselves to be "more important" than those whose activities fulfil the purpose of the whole system. Evidence of this can be seen both in the attitudes and actions of those people, e.g. cost reduction programmes are most often aimed at branch or factory since, "that is where the problem is," rather than "Head Office." Relatively junior "experts" from Head Office are, and expect to be, treated as "little tin gods" when visiting distributed parts of an organisation. System Three can for many organisations be seen as attracting those who would rather talk about work than do any!

A particular example of this spurious importance and abuse of position might be a junior Work Study analyst, who, as part of the Resource Bargaining process may be armed with a low variety "Work Measurement" model of an operational unit's

staffing needs. Using this model he will dictate to a Manager how many staff and of what grades he may have to fulfil his System One purposeful role. Factors which, in the Manager's opinion, affect the "pure" result obtained from the model will be ignored by the Analyst if they are not capable of straightforward inclusion in the model, or, if they mean treating the particular unit differently to others which appear similar. The impact of this will depend to a significant degree on the accuracy of the standard model in relation to the particular unit. Problems arise when the analyst has neither the discretionary power nor the imagination to adapt the model and its outcomes to the particular case.

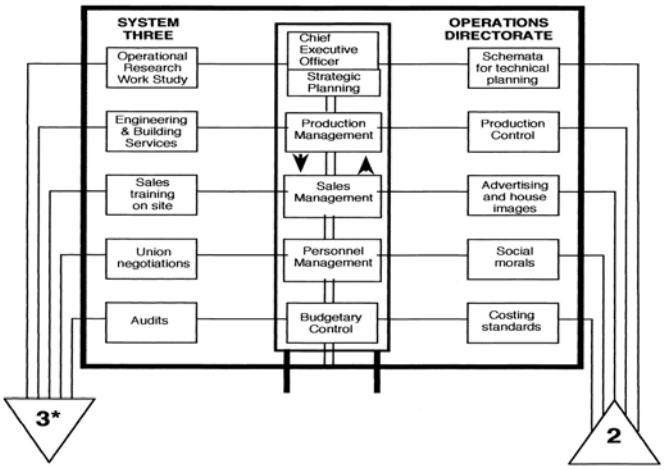

General Example of a System Three
(Adapted from Beer (3 PG 93))

Figure 4.5
91

General Example of a System Three
(Adapted from Beer (3 PG 93))

Figure 4.5

System Three is logically necessary to manage the "inside and now" of the organisation. However, it needs to be recognised by the actors in this System that, without System One, there is no role for System Three since the organisation no longer exists. The focus of design for System Three and its subsequent activities should be on how it can enable System One to function most effectively and efficiently whilst minimising its own cost to the organisation. Figure 4.5 is a general example of System Three components, the arrows between Sales Management and Production Management represent the ongoing dialogue which should exist between these two functions.

4.8 System Four

The system so far described is "autonomic", it will continue indefinitely doing what it has been designed and structured to do. System Four is the sub-system that enables the learning and adaptation which are considered essential to viability.

Referred to by Beer as a "Development Directorate," System Four is comprised of those functions which deal with the future, or, "outside and then," of the organisation such as, Research and Development, Market Research, Strategic Planning, Personnel Development and Manpower Planning. For the VSM these units continuously and systematically scan the total environment of the organisation to identify relevant patterns of change. Then, using a model of the organisation, they consider whether and how it should adapt to cope with those changes. The "internal" model of the organisation is informed by System Three, a model of the organisation's environment focuses on aspects where the different issues identified by the research units intersect. All of this activity may be undertaken on a part-time basis in a small organisation, or by properly constituted committees and advisory groups in others. This satisfies the Conant-Ashby Theorem, quoted by Clemson(20 PG 201) that "Every good regulator must contain a model of that which is regulated." It enables the use of feedforward or

strategic control, predicting disturbances before they affect the organisation and encouraging timely adaptation, avoiding problems rather than confronting them.

Beer is critical of the lack of an effective System Four in most contemporary organisations. He argues that a fully effective System Four needs to be realised in the form of an "Operations Room." He proposes that all of the different factors affecting the future of the organisation can be displayed and the different units can engage in dialectical debate, in a "club-house" atmosphere, and agree how the organisation should respond. Beer[1 PG 265] considers that "System Four is often, indeed usually, virtually empty." This is because the components of adaptation are not brought together in a coherent manner, "It is quite normal, in a large enterprise, for the elements of System Four to have virtually no knowledge of each other's activity"[1 PG 232].

The System Four activities suggested above are most usually carried out by discrete departments which often jealously guard the information which they have gathered. This may be done either to preserve their own power and position within the organisation, or the information may be rejected (e.g. shelved reports) because it challenges what Waddington[23] has called "COWDUNG" (the conventional wisdom of the dominant group). Beer [1 PG 233] gives an example of this type of behaviour, "I recall a firm in which the market research department did indeed make itself aware of every report issued by the operational research department; but it did so only to mount immediate studies seeking to disprove any OR finding that affected Marketing!" A less sinister consideration is that the possessors of information, holding to a reductionist view, simply do not realise that their failure to share it with others may threaten the future of the organisation.

For Beer then, the integration which is sought in the "Operations Room" simply does not exist in most organisations. He argues for such integration on two grounds[1 PG 231-232]:

The "change in the rate of change" of the world has rendered the traditional "discrete" approach inadequate and inappropriate.

The responsibility for adaptive behaviour has shifted, from the "Boss" supported by staff advisors, a situation which became prevalent after the Second World War, to the advisors themselves. The techniques and tools used by the advisors are likely to be outside the competence of the "Boss" who must place his trust in the competence of their operators. The power has then shifted to the advisors, they must be responsible for the decisions made.

The VSM requires that System Four people be "in line" in order to be accountable. They should not be seen as hierarchically superior to System Three. They have a different view of the organisation, and unlike System Three, a particular knowledge of its total environment. Figure 4.6 shows a generalised view of a System Four with its environmental and System Three connections.

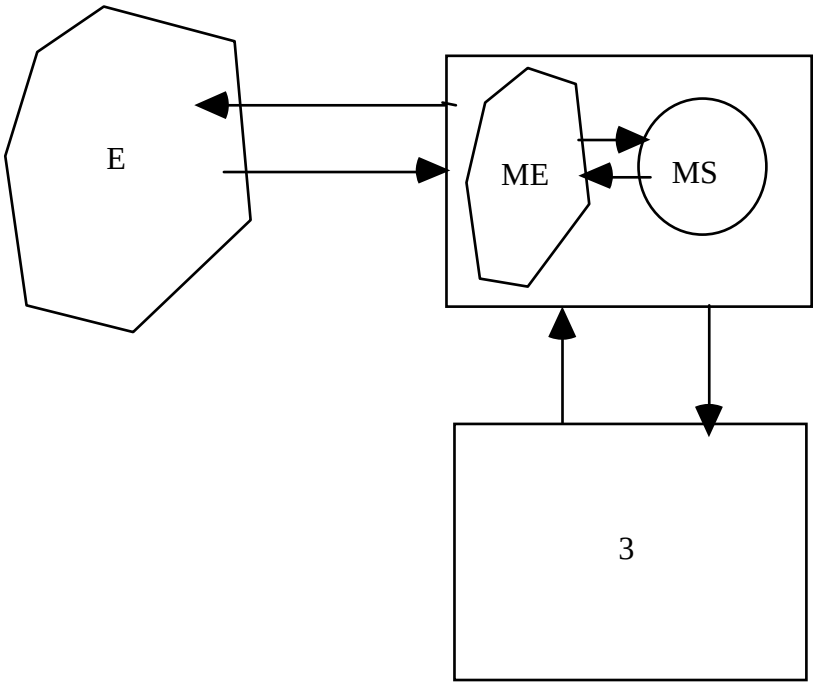

Key: E=Environment
ME=Model of Environment
MS=Model of Total Viable System
3= System Three
→ = Communication Channels

Generalised View of System Four

Figure 4.6

4.9 System Five

Systems Three and Four are envisaged as engaging in a continuous conversation to negotiate the need for investment in both stability and adaptation of the Viable System, this is represented by the Three-Four homeostat in Figure 4.6. Systems Three and Four are "accountable to each other"(1 PG 252) for the disposal of their respective varieties. In the terms of the model, one cannot be permitted to dominate the other, although this often happens in practice, e.g. when System Four is weak or poorly articulated. A system is necessary to maintain balance between the demands of these two Systems, this is System Five.

The essence of viability is that System One must continually produce itself, remembering that "the purpose of a system is what it does and what the viable system does is done by System One"(3 PG 128). This means for Beer(1 PG 254) that,

> "the existing enterprise has to go on being itself. Therefore, it follows, the investment required to enable System One to produce itself is **mandatory**".

"To go on being itself" does not mean that the component parts of System One cannot be changed, but that System One as a whole is guaranteed survival. System Three must then appropriate to itself those resources, of all types and both internal and external, which are necessary to ensure this survival, and, "What is left is, grudgingly, available to System Four."(1 PG 254)

System Five, the final sub-system of the Viable System Model "monitors" the ongoing conversation between Systems Three and Four and, when necessary, arbitrates between their conflicting demands for resources. This arbitration is not seen as being made evident by the imposition of sets of rules but, preferably, by the establishment of a "Corporate Ethos - an atmosphere"(3 PG 124). System Five is seen as a "variety sponge of gigantic capacity"(3 PG 125), dealing with all the residual matters which could not be addressed by other parts of the system, or "mopping up variety that the homeostasis of One-Three and Three-Four will not have accounted for."(3 PG 130)

Beer(3 PG 125) proposes the following test of a System Five ethos:

> "Try to think of a really way out idea in your organisation - so way out that certainly no one has ever considered it, although it is not manifestly daft.

HOW WOULD THE BOARD REACT TO THAT?

> The betting is that you know the answer exactly. No-one has put the idea forward just because the answer is self-evident".

Although System Five is "the Boss", it is not in cybernetic terms more important than the other sub-systems, it does not "produce the system", it "is only thinking about it."(3 PG 128) System Five is the ultimate authority in the system and as such has two functions:

> It supplies logical closure to the viable system.
>
> It monitors the Three-Four homeostat.

System Five is comprised in most organisations of "the Board". It must be remembered however that, in a Company, the Board is appointed by the shareholders, on whose behalf the Chairman and Directors claim to speak. Ultimate authority rests then, in principle, not in the hands of the Board but of the shareholders. The same comment applies to the Government and electorate of a democratic state. System Five is expected to represent the essential qualities of System One to the wider System of which the system studied is a part. Figure 4.7, on the following page, shows the 3-4-5 metasystem.

4.10 Algedonic mechanism

System Five should, if all is properly designed within the viable system, be able to "fall asleep", it should be receiving a constant drone of satisfaction from below. The algedonic (pain/pleasure) mechanism is to enable System One to directly alert System Five of danger or threat to the System without having to pass through Systems Three and Four. This is shown as a dotted line in Figure 4.7. The algedonic mechanism divides the message being passed up to System Three

from System One and decides whether System Five should be directly alerted. Beer(3 PG 133) gives the following examples:

"Informal extreme: the roof has collapsed - phone the boss."

"Formal extreme: the four-minute missile warning."

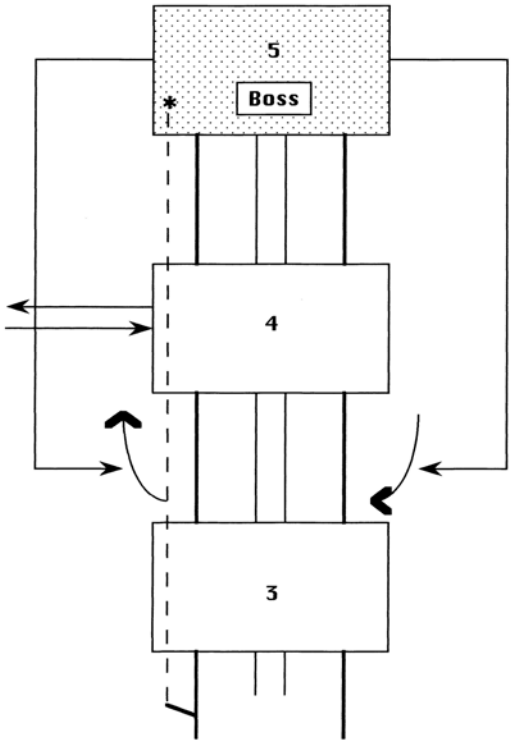

The 3-4-5 Metasystem
(Adapted from Beer (3 PG 129))

Figure 4.7
99

The 3-4-5 Metasystem
(Adapted from Beer (3 PG 129))

Figure 4.7

4.11 Environment

Figure 4.8, on the next page, shows the complete Viable System Model which has now been built. One point which should be noted from this diagram is that the total environment of the viable system is greater than the sum of the individual environments of the System One operational elements. This is because System Four, Planning, is concerned not simply with those things which the system already does but also with all the things which it doesn't do but which are relevant to the "Ethos" established by System Five.

The Complete Viable System Model showing three levels of recursion. (Beer (3 PG 136))

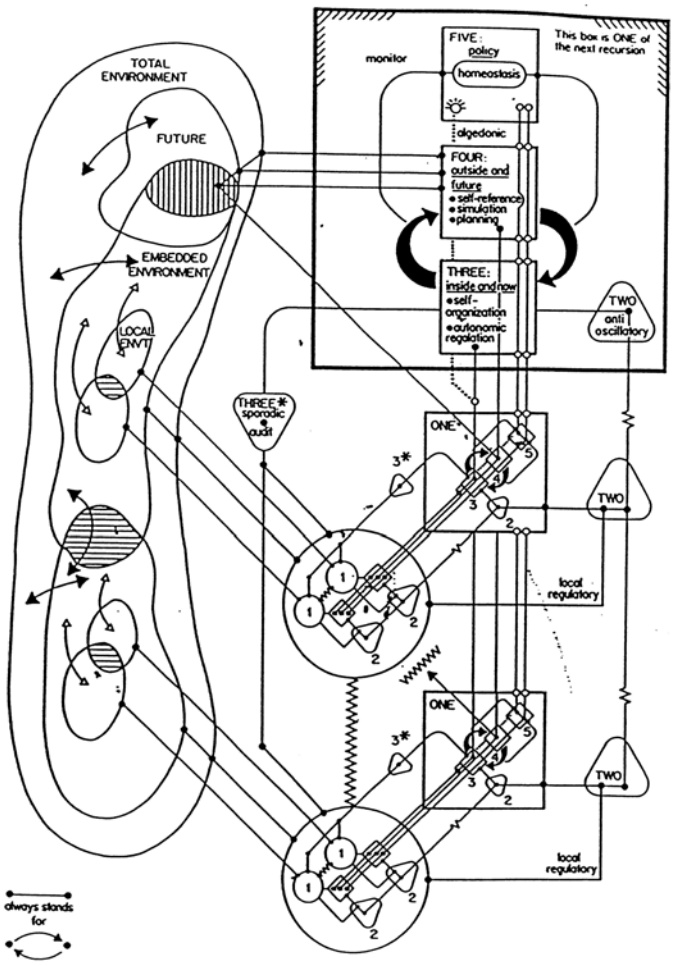

Figure 4.8

101

The Complete Viable System Model showing three levels of recursion.

(Beer (3 page 136))

Figure 4.8

4.12 Recursion

The Recursive System Theorem[1 PG 118] states that:

> "In a recursive organisational structure, any viable system contains, and is contained in, a viable system."

Viable systems are considered to be nested one within the other, like Chinese Boxes, in an infinite chain of viable systems. The structure and connections of each system are identical to that which has been elaborated in this chapter, hence the use of the word recursion.

It will be recalled that each Operational element of System One was comprised of Management and Operations units. These were not examined in the first elaboration of the model but were treated as "Black Boxes." If they were now to be opened up by the study descending a level of recursion they would be found to be identical in structure to the System already specified. Similarly if the study were to step up a level of recursion it would be found that the 3-4-5 of the system just elaborated would become the "Black Box" System One management of that higher level and the System One elements would be contained in the Operations Circle. This triple recursion is shown in Figure 4.8.

The recursive nature of the Viable System Model tends to great economy in the examination of a system, since all systems are considered to be identical in terms of their underlying structures and processes.

As the Viable System Model is observer dependent, i.e. the existence and purpose of the System being potentially matters of opinion rather than fact, another factor emerges with the Recursive System Theorem. In addition to being perceived as contained in a chain of Viable Systems that one observer has

defined, the observed system may also be at the centre of any other chain of systems that another observer has defined. This is shown diagramatically in figure 4.9.

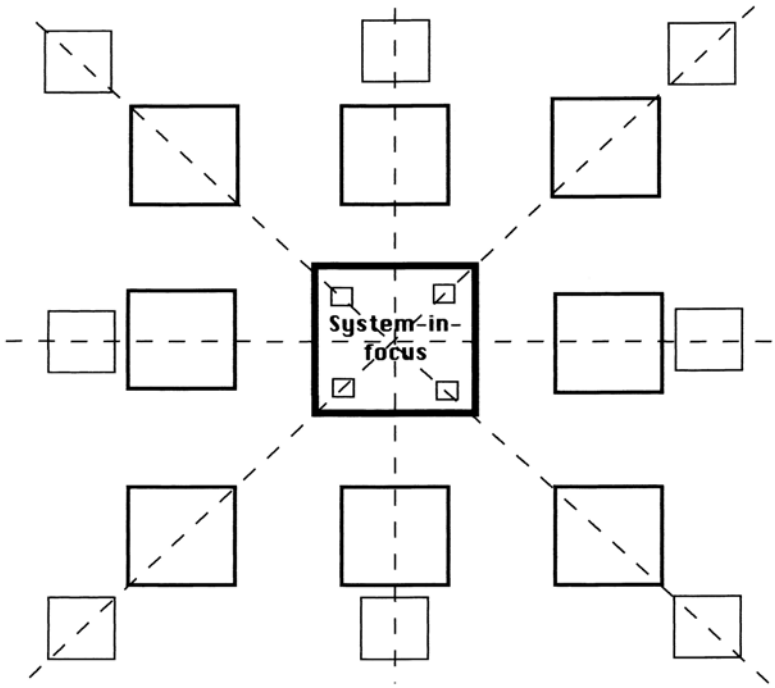

Possible Chains of Systems

Figure 4.9

103

Possible Chains of Systems

Figure 4.9

4.13 Autopoiesis

Any viable system is autopoietic, that is it continuously invests resources in producing itself, preserving its identity. Beer[1 PG 405] credits Maturana and Varela with having revealed the "principle of life itself. Life is not characterised, as most people would say, by the process of self-*re*production, but by the process of self production. Life is devoted to the preservation of its own organisation." He continues the discussion with reference to the human body, the cells of which are continuously replaced whilst the identity of the individual is preserved. He also remarks on well known institutions such as hospitals, universities and large commercial organisations which, while continually changing their component parts, branches, divisions, wards and staff, may retain their identity as organisations. The University of Hull, for example, is always the University of Hull despite the fact that around one-third of its students and a number of staff are replaced every year. This investment in self-production, e.g. the resource appropriation by System Three, is mandatory. It must be undertaken to preserve the organisation and is a "healthy" sign.

Systems Two to Five are not viable systems; they exist as services to System One. Investment must be made in their self-production in order for them to continue to fulfil their function. However, this should be only to the extent that they are part of System One at the next lower level of recursion. At any given level of recursion of the viable system, Systems Two to Five should exhibit no internal autopoietic behaviour. If they do they have become "pathologically autopoietic," absorbing more resources than are necessary for self-production of the viable system and they threaten its viability.

Pathological autopoiesis is represented for Beer by "The Establishment." He proposes[1 PG 410], using the example of a hospital staff, a simple test to discover whether the autopoietic function of the organisation is healthy or pathological:-

> "What proportion of everybody's time is spent on healing, and what proportion on the autopoiesis of the medical profession?"

> "The hospital is ritualistic; and it is not difficult to examine these rituals to determine the effort that goes into keeping all concerned in their appropriate places, a process whereby the hospital produces its own organisation."

When the proportion of time devoted to self-production exceeds the minimum necessary then the autopoietic function has become unhealthy.

A definition of "The Establishment" is then provided(1 PG 412) :

> " 'The Establishment' in any social system comes into being at the point when the vital principal of autopoiesis consumes energy greater than that needed to maintain cohesiveness through the appropriate number of viable recursions that marks its claim to organisational identity as a set of embedments of System One.
>
> 'The Establishment' presents autopoietic activity on the part of Systems Two, Three, Four, or Five; and this constitutes a pathological symptom of the viable system."

The admonition with autopoiesis is that to ensure viability, and with it efficiency and economy of operation, participants in an organisational situation should be conscious of the resources not devoted to achieving the purposes of the system.

4.14 Amplifiers and Attenuators

The amplifiers and attenuators of variety referred to throughout this chapter have already been specified in Chapter Three. They are the tools of variety engineering, viz.:

> For variety attenuation: Structural, Planning, Operational and Rules/Policies.
>
> For variety amplification: Structural, Augmentation, Information Management (which can also be an attenuator.)

4.15 Measurement

Traditional forms of performance measurement, such as cost accounting, profit and loss statements etc. are regarded by Beer as inadequate and insufficient measures for a viable system. While, in the contemporary framework of Western society, organisations must at least break-even in order to survive, this is regarded by Beer as being a constraint upon their viability rather than an objective of their existence. He proposes that to measure the productivity of a viable system we should be concerned with three aspects (24 PG 163):

> "Actuality: This is simply what we *are* managing to do now, with existing resources, under existing constraints.
>
> Capability: This is what we *could* be doing (still right now) with existing resources, under existing constraints, if we really worked at it.
>
> Potentiality: This is what we *ought* to be doing by developing our resources and removing constraints, although still

operating within the bounds of what is already known to be feasible.

He proposes that these productivity measures, expressed in pure numbers, should be combined to provide measures of achievement expressed as ratios. These measures of achievement are:

Productivity: the ratio of actuality and capability.

Latency: the ratio of capability and potentiality.

Performance: the ratio of both actuality and potentiality, and also the product of latency and productivity.

Figure 4.10 on the next page represents these diagramatically.

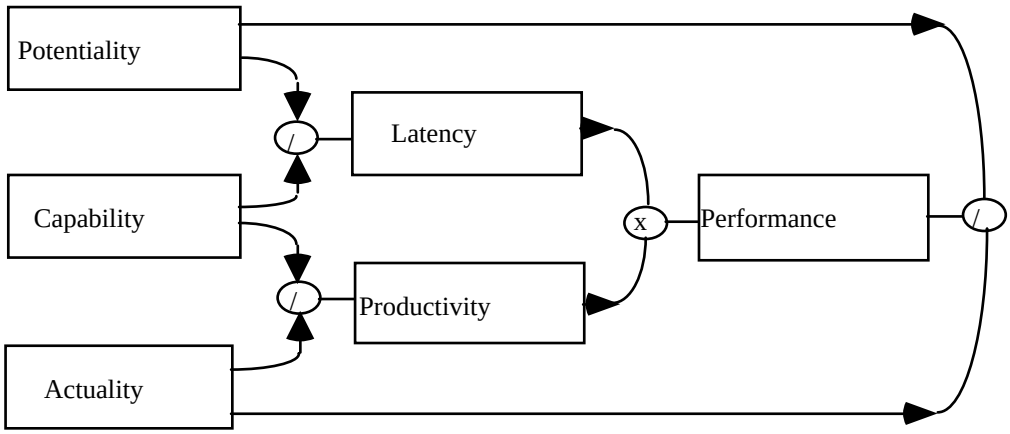

Performance Measurement System (Beer 24 PG 164)

Figure 4.10

These forms of measurement are seen as being applicable to all critical aspects of the performance of the viable system, and to be capable of containing, in a simple way, all the information normally expressed in more conventional ways.

4.16 Methodology

The Viable System Model, as elaborated in the previous pages, specifies the underlying structure of a viable organisation in cybernetic terms. It is a general model applicable to any particular case and this is a major source of its utility. The VSM can be used to "diagnose" faults in existing organisations, by comparison of the "reality" of the organisation with the "expectations" of the model, and to suggest "remedies" for the perceived ills.

To ensure that the Model is usable in this way Beer has provided a "handbook for Managers"; Diagnosing the System for Organisations(3). This provides both a systematic description of the model and "instructions" for its use. The established methodology has been crystallised by Flood & Jackson(5) and their briefer version has been the foundation for this section. The methodology consists of two parts, system identification and system diagnosis. At each stage of the identification and diagnosis process, the VSM diagrams are used to record findings of "how the organisation is", in other words, the diagnostic diagrams should reveal any weaknesses identified during the process.

4.16.1 System Identification

The Viable System Model assumes a unitary view, that is that the goals or purposes of an organisation are either agreed between the participants in the system or are readily susceptible to such agreement. It is firstly necessary to identify the purpose to be pursued. This may be "given" by the owners of the organisation to be studied, or may be imputed by the observer of the system.

The next step is to identify the appropriate system for achieving that purpose. This may exist as a physical or legal entity, e.g. a Company or a University, or may be a conceptual system, e.g. "Western Society" or "the man on the Clapham

omnibus", both of which are accepted as existing but have no "physical" presence. Beer(3 PG 4) proposes that "in practice, the best plan is to consider a trio of viable systems at any one time: the organisation we wish to study, that within which it is contained, and the set of organisations contained by it - **one level of recursion down**." This helps to ensure that the study focuses solely on issues which are relevant to the system under study by providing full awareness of the adjacent levels.

It is often found in practice that managers devote time and energy to matters which fall outside their sphere of interest, either delving into more junior matters, because they are more comfortable, or addressing more senior matters. These are not necessarily bad things and will often be useful to the running of an organisation. The allocation of interests to different recursive levels ensures that managers are aware at what level they are operating, when, and perhaps most importantly, why.

The system identified at the centre of the triple recursion is known as, the "System-in-focus." Once this is established it is necessary to specify the viable parts of that System, i.e. the operational elements. These, taken together, comprise and produce the System One of the system-in-focus. The next step is to specify the viable system of which that is part, i.e. its containing system and wider environment. Figure 4.11 on the following page gives an example of this identification of three recursions of the Viable System.

It is vital at this stage to recall that the "viable" parts of the system are those elements which produce it, the "purposeful" parts, as errors are commonly made with this aspect. For example, if the system-in-focus is a hospital, and the imputed purpose of the hospital is to heal the sick through medical treatment, then only those activities concerned with healing in this way are purposeful. This could be the wards or the operating theatres, or any one of the myriad medical specialities.

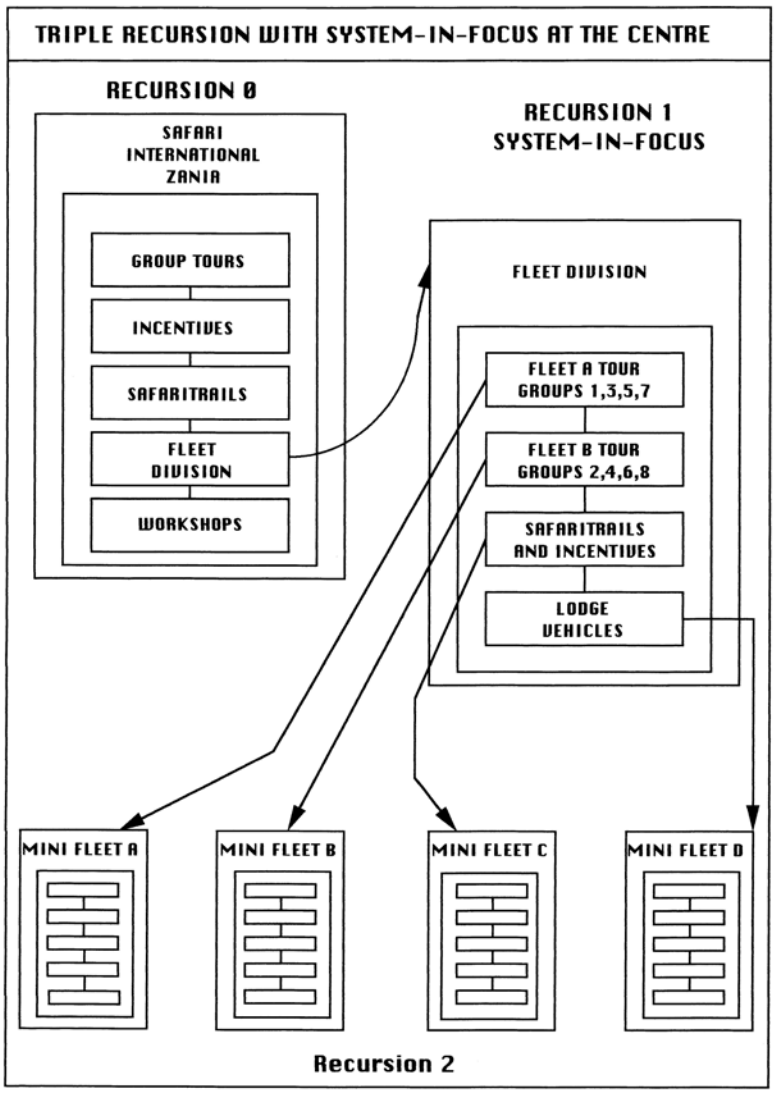

From Flood & Zambuni (25)

Figure 4.11

111

From Flood & Zambuni

Figure 4.11

Any part which exists to enable this purpose to be carried out is not, in itself and within the conventions defined, "purposeful." Thus the pathology lab, the kitchens and the "administration" are supportive, they do not form part of System One. (If the purpose of a Hospital were defined as being "a system for employing people" then the different conventions would demand a different interpretation of the composition of System One).

The parts specified as operational elements of System One, must, in principle, be capable of independent existence. A ward, for example, could in theory be separated from a hospital and continue in existence, an operating theatre could be established independently etc. The "administration" should have no existence outside the context of the hospital although it frequently does.

4.16.2 System Diagnosis

The trio of embedded systems having been identified, emphasis moves to an examination of the system-in-focus through the cybernetic principles upon which the VSM has been constructed. The diagnosis is expected to reveal the faults in the cybernetics of the organisation so that, upon completion of the examination, courses of action to rectify problems will have already been identified. The process of diagnosis is, then, the beginning of the cure and commences with an examination of System One.

4.16.2.1 System One: Implementation

System One is concerned with implementation, the aim of studying it is to establish whether it is adequately composed to fulfil its purpose. The first step is to fully detail the environment, operations and localised management of each of the System One elements. It is often found that System One elements are not

treated as viable systems in their own right and consequently lack an adequate management to tend to their own affairs.

The constraints imposed by higher management upon the parts of System One should next be detailed. This will reveal whether System One is able to carry out its specified purpose, i.e. does it have the autonomy, resources etc. The next step is to study how accountability for resources is exercised and to detail the mechanisms for evaluating performance.

4.16.2.2 System Two: Co-ordination

System Two exists as a service to System One in damping oscillations between operational elements. The study of System Two requires that possible sources of oscillation or conflict between System One elements be identified and the mechanisms which exist to harmonise them be detailed. It is often found that System Two is inadequately represented, or has been replaced by "instructions" on the command channel. Sources of oscillation may exist for which no damping mechanism has been established. The methodology requires that the stakeholders perception of System Two at the operational level be discovered, i.e. is it facilitating or threatening?

4.16.2.3 System Three: Control

System Three exists to control all of the activity of the System One elements. It should aim to do this while preserving the maximum autonomy possible at the operational level, consistent with systemic cohesion. The first step in examining System Three is to list all of the components of this system for the system-in-focus. Next the way in which System Three exercises its "authority" over System One should be revealed. The style and nature of the Resource Bargaining process should then be studied, i.e. what mechanisms exist for this process to be

carried out. The System Three individual(s) responsible for the performance of the parts of System One should then be identified.

Audit enquiries generated from System Three and conducted through the System Three* channel should be identified, in particular their frequency and which aspects are studied in this way. The "nature" of the relationship between System Three and System One should be considered and understood. How is the System Three-System One relationship perceived, interfering autocratic, consultative, democratic? It is often found that System Three managers intervene or interfere unnecessarily at the System One level.

4.16.2.4 System Four: Planning

System Four represents the activities which enable the organisation to adapt to environmental changes which were not considered when the organisation was designed. The first step in examining System Four is to list all planning activities of the system-in-focus considering whether the time horizons are appropriate to the needs of the organisation or the activities are sufficient to guarantee adaptation to the future. To do this, System Four must monitor the environment effectively and assess its trends. Mechanisms and procedures should be in place which achieve this.

An effective System Four will be open to "novelty", new ideas or new ways of dealing with established ideas and the study should reveal to what extent System Four is capable of handling this aspect. A common major weakness of System Four, as has already been discussed within this Chapter, is its inadequate articulation and coherence in many organisations. The extent of this coherence needs to be established. Is a management centre or operations room provided in which external and internal information are brought together to enable effective decision making?

4.16.2.5 System Five: Policy

System Five represents the identity of the organisation to the wider system and creates an "ethos" for the system-in-focus. Examination first requires that the composition of "the Board" be identified and its method of working detailed. Then it can be determined whether System Five provides a suitable identity for the system-in-focus. Is this identity shared with System One or does it claim to be something different?

The "ethos" established by System Five should then be examined to discover how it affects the activities of System Four. This is necessary because the "ethos" determines what environmental occurrences will be treated as relevant by System Four. If this is too narrowly defined then matters of importance to viability could be missed; or, alternatively, too broad a definition may lead to System Four undertaking too shallow a research on too wide a front. The last step is to determine how System Five responds to the System Three-Four homeostat, does it tend to treat either System Three or System Four more seriously?

4.16.2.6 Information channels

The final stage in the diagnostic process is to ensure that throughout the organisation the information channels, transducers and control loops, have been designed in accordance with the cybernetic principles. These were elaborated in Chapter Three.

4.16.2.7 Rectification and common faults

A diagnosis following the above methodology is expected to reveal flaws in the organisation which threaten its viability. Steps should then be taken to rectify these matters having regard to the cybernetic principles.

Common faults found, not previously highlighted include the following(5 PG 96):

The existence of additional and irrelevant structural features.

Pathological autopoiesis in Systems Two-Five

System Five collapsing into System Three because System Four is weak or poorly articulated.

Inadequate, or delayed, transmission of information and performance measures.

4.17 Summary

This chapter has fully elaborated the Viable System Model indicating how it uses and develops the principles of cybernetics. The second part of the chapter provided a methodology for using the model. The next chapter will review the major prior works concerning the model including theoretical and practical aspects as well as its major criticisms. A review of Beer's perceived ideological position will be included.

Chapter Five

The Viable System Model:
Applications, Developments and Criticisms

This chapter continues the investigation of the Viable System Model with a review covering prior applications, developments and criticisms. Beer's apparent ideological and philosophical position in relation to management and the model are explored.

> "In communication everything depends on what you end up with, not on what was actually said or written down."(24 PG ix)

5.1 Introduction

The Viable System Model has been in the public domain for over twenty years and has been variously reviewed, revered and reviled by both systems and management thinkers and practitioners during that time. This chapter aims to explore the published applications, developments and criticisms of the model.

5.2 Applications

This first section of the chapter reports and reflects on the major published applications of the Viable System Model, commencing with Beer's substantial work in Allende's Chile. That application provides a base for all of the subsequent work.

5.2.1 "El Pueblo"

Beer gives an autobiographical account of the application of the Viable System Model to a substantial part of the Chilean economy under President Allende in the second edition of "Brain of the Firm"(24). This review is substantially drawn from that volume.

Salvador Allende was elected President of Chile in the autumn of 1970 by a minority (37%) of the electorate. He was the first democratically elected Marxist president in the western world. Despite the difficulty of battling with the Chilean Congress and Senate from a minority government position, he embarked upon "a programme of nationalisation of the means of production, distribution and exchange."(24 PG 246) This nationalisation programme, which affected both local and foreign businesses, was being implemented through an organisation called CORFO (Corporacion de Fomento de la Produccion), a form of merchant bank.

Fernando Flores was Technical General Manager of CORFO and President of INTEC (Instituto Technologico de Chile). He was a cybernetician who had previous experience with Beer's consulting organisation SIGMA (Science in General Management) and invited Beer to contribute to this programme in a letter claiming to have direct responsibility for "the complete reorganisation of the public sector of the economy." He stated that he was in a position where "it is possible to implement on a national scale - at which cybernetic thinking becomes a necessity - scientific views on management and organisation." Beer met Flores in London and after he "became enthused with the plans that the government was making" agreed to take charge of the deliberations of Flores and his team. Subsequently in May 1972 Beer was appointed Scientific Director of the project.

The Chilean economy was at the time, under severe pressure. The price of copper, a commodity which represented eighty per cent of Chile's foreign earning capacity, had fallen, increasing the balance of payments deficit. All workers had been

awarded a forty per cent wage rise as part of an attempted redistribution of wealth, and, peasants, previously paid in kind, were entitled to a workers wage. While Gross National Product and industrial production were rising, support for the Government had increased to fifty per cent and the lower-paid were spending, the higher paid were not investing. Foreign credit and technical support were non-existent. Although inflation had been reduced from its previous thirty-five per cent, foreign reserves would "in all circumstances" be exhausted within a year.

After much discussion with Flores, his team and with other Senior Members of Allende's government Beer proposed a project to manage the industrial economy of Chile. This project would work in real time, using the Viable System Model as its cybernetic base. The project was seen as a first step towards the application of the principles of cybernetics to other aspects of government.

Allende, despite what Beer(24 PG 258) calls "a certain pride in his office", was concerned when the proposals were explained to him, that they should be "decentralising, worker-participative and anti-bureaucratic." Beer considered these intentions as "fundamental" to the task. Beer explained the Viable System Model to Allende, using the neurophysiological (brain) analogy, and it was Allende who proclaimed that System Five, previously visualised by Beer as the President of the Republic, was in fact the people, "El Pueblo", as represented by himself.

The overall project envisaged the whole of Chile in terms of recursions of the Viable System. Beer describes this as follows (24 PG 249):-

> "Recursively speaking, the Chilean nation is embedded in the world of nations, and the government is embedded in the nation. This was understood; all these are supposedly viable systems.

> The government should be conceived as a viable system (System Five being the President of the Republic) in which System One consists of the Headquarters of each major function - health, education, finance, industry ....
>
> Picking out industry as a viable system embedded in this (System Five being the Minister of Economics), we find a set of industrial sectors constituting System One. These include such elements as food, textiles, automotive ...
>
> Each sector (System Five being the Under-secretary for Economics with his appropriate committee) contains, as System One, a set of enterprises, or firms.
>
> Embedded in the enterprise is the plant; within that the department; within that the social unit of a working group; and within that the individual worker - viable systems all."

This recursive embedment is shown diagramatically in figure 5.1 on the next page.

Arising from this Beer was able to propose the uniform use of the Viable System Model at all levels of recursion. This itself acted as a variety attenuator and enabled great economy in the modelling process and in implementing the plans. Project Cybersyn (cybernetic synergy), as it eventually became known, had a single objective:

> "To install a preliminary system of information and regulation for the industrial economy ... that will demonstrate the main features of cybernetic management ... and begin to help in the task of actual decision-making by 1st March 1972."

Beer's paper detailing this project proposed a plan of action for a sample of enterprises in a sample of industrial sectors to be joined in this new regulatory system within four and a half months.

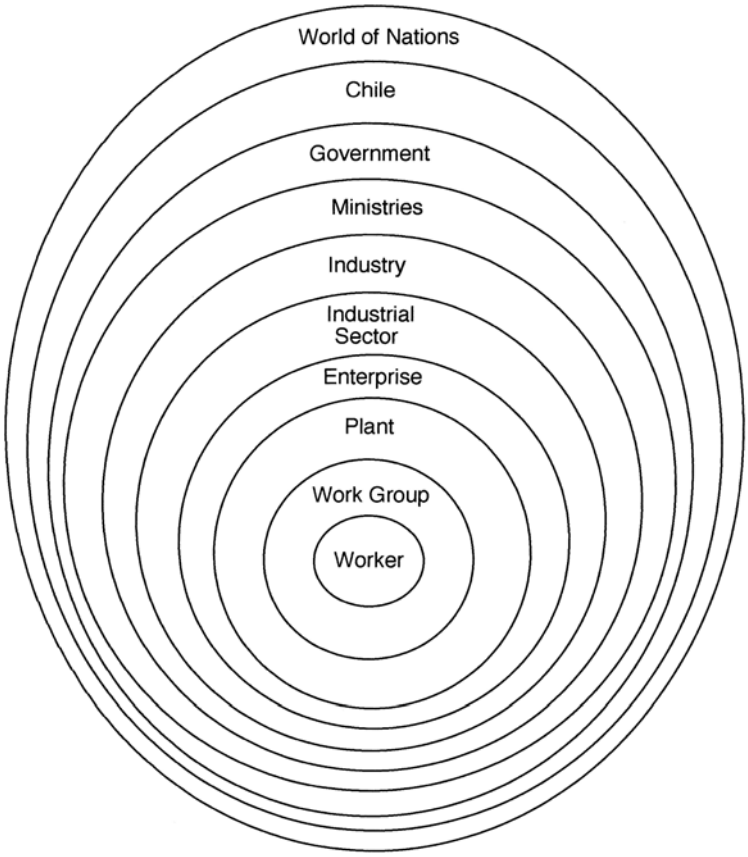

The Recursive Model of Chile in the World of Nations

Figure 5.1

123

The Recursive Model of Chile in the World of Nations

Figure 5.1

Project Cybernet aimed to link, through a single communications network, all units of production in Chile. A suite of computer programs would be used to enable more effective management both of individual units and of the economy as a whole. The idealised design would have used a distributed network of computers but had to be modified to work within the limited technological and financial resources then available to Chile. Thus the decision was made to operate on the computing power available in Santiago and to communicate with the distributed production units through established communication systems.

To provide input data for this system a series of operational research analyses down to plant level were undertaken in each sector of the economy to identify performance indices appropriate to each unit. The indices were based on the triple index outlined in Chapter Four (Page 106-108). It was agreed to measure "social unease" by monitoring absence rates, and it was also intended that further development of the model would allow the "worker committees" in charge of each factory to add additional measures for their own use. It was found by the OR teams that ten to twelve aspects were all that required monitoring in order to assess the performance of each factory.

Problems were encountered in the development and gathering of commitment to these individual factory models, arising from differences in approach. Beer(24 PG 271) saw the teams as "briefed to *explain* the quantified flowchart model in a plant, then to *enlist help* in creating it from those who worked there, and then to *obtain agreement* on the performance measures to be used. It was clear that this was not always being done in the intended spirit." This Beer sees as the likely cause of Project Cybersyn being called "technocratic" by some reporters of the experience.

The Cyberstride Program Suite was the software designed to enable the monitoring of information flows throughout the system. This was to be driven by the indices identified, to alert the operational elements at each level to emergent change and provide an 'arousal filter' for Systems Four and Five. This formalised the belief in an

information system that was "prospective and anticipatory, rather than retrospective and a matter of historical record." The work of writing these programs was sub-contracted to Arthur Andersen & Co. of London who, following Harrison & Stevens, (27) cited by Beer, proposed the use of Bayesian probability theory. This enabled ready recognition of changes in the input indices showing whether these represented "transient errors, step functions, or changes in time, trend and slope." This was expected to allow much more coherent responses to changes in the performance of the various systems. The combined information systems, Cyberstride & Cybernet covered around seventy per cent of the industrial economy, about four hundred enterprises, and dealt with the internal operation (Systems 3-2-1) of the industrial systems, enabling real-time, day-to-day control.

The Checo (CHilean ECOnomy) Programs were devised to cater for planning (System 4). It was seen by Beer and his team that no adequate mechanism existed for planning in Chile. The National Planning Office (ODEPLAN) had for Beer "become an institution dedicated to preparing the National Accounts and developing statistical reports," having no methodology "that could conceivably discharge those (planning, System Four) functions of a viable system." The programs were intended to provide a "real-time" simulation of the way the Chilean economy could be expected to develop over a ten year period, drawing information from both the internal systems and from the environment. It was intended that, in a fully developed System Four, the Checo simulations would be updated daily using current information and providing assistance in decision-making for the performance of the whole economy. Results from early simulations were unreliable using historical information and were treated as a learning tool.

The time constraints under which the entire project operated and in particular its sudden ending prevented the full development of the Checo Programs. These were in any case limited by the practical problem of the recursivity of System Four not being resolved, the lack of confidence in the results produced by the simulations and the external threat to the Chilean cause from other countries and ideologies.

Opsroom, was envisaged by Beer as an "environment for decision,"(24 PG 254) a place where all of the internal and external information affecting the organisation (industrial economy) could be brought together, and using simulation, the impact of possible decisions could be assessed. The practical embodiment of this was a large, unobstructed hexagonal room containing an iconic representation of the Viable System Model. Labelling of the model could be changed to represent any chosen level of recursion. Additional screens were provided to display alerting signals for Systems 3-4-5 and algedonic signals arising from lower levels of recursion. Information for the simulations, rather than being "on-line" to this system was provided through a further set of three screens fed by sixteen back projectors. Through this system it was possible to select from 1200 "pictures" of information to inform the discussion. Information from Checo simulations was similarly provided. It was intended that ultimately these screens would be replaced by computer systems that would have provided both printouts and a screen representation of the changes being considered.

The People Project which commenced in March 1972 was aimed at the "organisation of the state that is not economic, but societary."(24 PG 278) A paper parallel to that on Cybersyn addressed a project to examine:

> "the systems dynamics of the interaction between government and people
>
> in the light of newly available technology such as TV
>
> and discoveries in the realm of psycho-cybernetics"

This paper contained a critical review of the interaction of Government and People in terms of Ashby's Law of Requisite Variety and showed that whilst the actions and statements of Government were being amplified to the people through the use of

new technology, the peoples responses were still artificially attenuated to the use of the electoral mechanism on a periodic basis. This attenuation of response was perceived by Beer to "build up pressures in the system" that could not be released potentially leading to "demonstrations, agitation, perhaps violence, possibly revolt."

The paper outlined a proposal for the use of an "algedonic meter" by a "properly constituted sample of people" through which they could register a response to Government broadcasts on a scale of "happy/unhappy." This was envisaged by Beer as closing the algedonic loop between People and Government. Beer concluded his paper by noting that this was no more than a formal way of handling the system that already existed as "clamour of various kinds." He stated (24 PG 283):

> "It is proposed to create a new public response system, in order to provide convenient and legal outlets for pressures that are already making themselves manifest. These pressures constitute political power - in the limit they may overthrow governments."

While this public response system was never installed, a preliminary experiment was conducted which demonstrated that an algedonic meter to measure public eudemony could be created in practice. Although not formal channels, Beer saw the music and art of the people as giving further expression to their level of contentment and as means by which they shared their views. A plan to give a more structured approach to this societary self-reflection was not achieved due to technological and economic constraints.

The final element of The People Project was a planned "manual" which translated the whole project from cybernetic terms to those of the people themselves. This was to be launched at the same time as the Operations Room. This was to be an

endeavour to allow the people of Chile to take command of their own Government and the work that was being undertaken on their behalf.

An attempted coup in September 1972 was followed by "The Gremio Strike." This was a strike by the small entrepreneurs of Chile who felt threatened by the proposed nationalisation of transportation and distribution systems. The strike, which is perceived by Beer to have been supported by agencies external to Chile, provided an opportunity to utilise the cybernetic systems which had been established in an attempt to enable the Government to deal with this strike which "was a serious attempt to pull the government down." Beer (24 PP 313-314) describes the adaptation as follows:

> "An emergency operations centre was set up next to the communications centre, and divided into eight functional commands (transportation, food, and so on). One of our own people was put in charge of each. Similar centres were set up regionally, on the disseminated net model, using Cybernet. Within twenty-four hours messages were flowing, non-stop around the clock, at the rate of two thousand telexes per day. This immediately posed an enormous problem in providing the requisite variety to handle such an inundation. Two of the senior cyberneticians organised a filtration system: some signals were algedonic, requiring instant decisions, while others could be attenuated into elements of the pattern that established the situation *in real time*. There are major lessons to be learned from this experience, the first group as illustrating the cybernetic principles of the national system, and the second as teaching much about innovatory praxis.
>
> The first cybernetic point is that the huge surge of information into the regulatory system operated as a negentropy pump:

instant communication loops sprang into being, and instant decisions were available. This contrasted with the turgid operation of the bureaucratic system, the entropy of which was close to unity - as is so common. Secondly, the inefficiency of the existing distribution system has lead to high physical redundancy - again, as is normal in unplanned economies (think of idle motor transport pools, railway marshalling yards, demurrage); the ability of the cybernetic regulator to survive the hostile action, derived from the effective use of the few physical facilities remaining under the government's control. Thirdly, such a network as this exhibits that very *redundancy of potential command* described in Chapter 15 (of Brain of the Firm, Ref. 24). This not only helps to absorb proliferating variety: it is decentralising, and it is robust. Finally, it had at last been made dramatically clear that properly organised information deployed in real time is a major national resource.

As to innovatory praxis, the lessons learned were very clear indeed. Let us first of all note that the cybernetic projects on which we were engaged had the full knowledge and support of the relevant ministers and managers from the President down. We had intellectual assent to the proposition that information constitutes regulation, and we had political commitment to the reorganisation that would embody this principle. There were no complaints on either side. But it was not until the top officials and the socially responsible ministers were plunged into the traumatic experience of the *gremio* battle, lived with the problems non-stop, used the tools provided however makeshift, and mastered the revolt, that they fully and deeply understood. We really had been talking

> about a managerial revolution, and not about the introduction of some rather slick administrative tricks."

The Allende administration survived the gremio strike and Beer quotes one Senior Minister as stating that "the government would have collapsed" without the cybernetic tools at its disposal.

The practical development of the various projects continued to develop in Chile over the next months against a background of increasing political instability although still increasing popular support for the ruling party. A new level of recursion was identified at the Government level and proposals were being made for major change in the methods of public administration. A second attempt by the *gremio* to bring down the government was made in August 1973 and was again foiled with the assistance of the cybernetic tools. On 11th September of the same year Allende was assassinated and this brought the project to a conclusion.

"As far as it went, it seemed to work" is Beer's own comment (28) on this experience and perhaps summarises the position as regards the Viable System Model itself. Project Cybersyn showed that it was possible to rapidly apply a single organisational model across a number of recursive levels of a national economy and to create a coherent, (relatively) cheap information system, working in real time to aid management decision making in the subject system and that this could assist in a crisis (the gremio strike) which had not been envisaged in its initial design.

Beer draws a number of lessons for practitioners from the overall experience commencing with "the first and foremost lesson ..... Act Fast."(24 PG 350) He justifies this comment not only on the grounds that "the threats were imminent and seen to be so" but that if a delivery date is a parameter of any manager's problem then "that is a parameter of his situation with which the management scientist must deal - otherwise he is no good." He argues that a perfect solution not delivered within a given time scale is of no benefit whereas an imperfect solution, given within

the time scale, and carrying the caveat that "the probability that my advice is correct is lower than I would like, but as high as can be generated by the evidence that could be collected and analysed in so short a time", provides some guidance. He also argues from this a need for the scientist to be as fully equipped as possible in terms of his "armoury of weapons" in order that his advice may be as "correct" as possible.

The other, confirmatory, lessons are, taken together by Beer as "The Cybernetics of Crisis":-

> "(i) The system is obedient to Ashby's Law of Requisite Variety;
>
> (ii) Information Channels maintain variety entrusted to them;
>
> (iii) Transducers neither attenuate nor amplify variety;
>
> (iv) The time cycle is synchronous for all subsystems.
>
> The extent to which a self-organising system recognises these requirements, seeks to obey them, flouts them (by accident or design), and finally achieves its come-uppance at their instigation will indeed determine that system's viability."

This may be seen as a statement that the laws of cybernetics will assert themselves, whatever the circumstances.

Ultimately, the application of the Viable System Model to the Chilean Economy may be said to have failed, in that the identified problem situation (of a failing economy) was not resolved. Perhaps this should be seen as a failure in the methodology

rather than of the model itself. Espejo[29] makes the point "the project did have methodological weaknesses" and sees that the major one was that:

> "... not only the structures of the Chilean public and industrial sectors were weak, but - and this was, and still is, a much more general problem - the concerned people did not see the need for a good cybernetics. A realisation of this assertion should have implied a stronger focus in the softer aspects of the process.. ."

This potential weakness ought, perhaps, to have been apparent from the outset. Allende's Government was comprised of a minority coalition, supported initially by only 37% of the electorate. This weakness was arguably compounded by the radical programme proposed for fundamental change in the organisation of the industrial and, later, the social economy and the use of a then not proven cybernetic approach to such organisation.

Flood & Jackson [5 PG 42] have proposed that the Viable System Model is applicable in a Complex-Unitary situation. That is a situation where the system of interest consists of a number of elements "in close interrelationship, exhibit probabilistic behaviour which is difficult to predict, are open to the environment and include purposeful parts. There is, however, assumed to be general agreement about the goals to be pursued (a unitary situation)." Clearly in Chile there was no such general agreement although the situation was undoubtedly complex.

It can be argued that if 63% of the electorate voted against Allende, his government "had a battle on its hands in both the Congress and the Senate."[24 PG 246] To progress a programme of fundamental reform against such opposition was clearly going to prove difficult, yet Project Cybersyn, which threatened the power and wealth of significant sub-groups in the country, appears to have paid no heed to this aspect. Machiavelli's[30] admonition that "there is nothing more difficult to handle, more doubtful of success, and more dangerous to carry through than

changes in a state's constitution" was apparently ignored. The project failed to address the needs and aspirations of some social groupings.

The Viable System Model views the organisation, in this case the state of Chile, as being in dynamic interaction with, and seeking to survive in, its environment. The Cybersyn projects undertaken, whilst recognising the economic interactions of Chile and its environmental trading partners, failed to address the political or ideological interactions of states in a world system. These latter interactions may be seen as acting at a higher level of recursion than the industrial projects undertaken. Within the constraints of the recursive nature of the model, the "Industrial Economy" is a contained System One element of the State which is itself a contained System One element of the World of Nations. In this case the activities and behaviour of the system are limited by the activities and behaviour of the system(s) in which it is contained and to which it seeks to belong. Failure to act voluntarily within these constraints may lead initially to "corporal punishment" (economic sanctions and blockades, withdrawal of aid for development) and subsequently "capital punishment" (externally supported revolution or direct acts of war).

This failure to engender support for the project at the national and global level is also reflected at lower levels of recursion. The OR projects undertaken at factory level were handled by teams

> "picked for their professional merit, and without regard to their political stance. Not surprisingly, a typical Chilean professional would be inclined to treat a worker with some condescension - unless he had strong political convictions towards the left."(24 PG 271)

Beer's opinion that this may have generated the "technocratic" opinion of the experience has already been quoted. At individual worker level it may also have

contributed to the support or lack of it revealed through the strikes and subsequent overthrow of the Allende administration. The workers of Chile had been promised a major role in the management of their production units. They may have perceived that the cybernetic tools and approaches being adopted by the OR teams were threatening that role. This may have been as a result of the attitudes of the professionals, the language in which ideas were expressed and questions asked or combinations of these factors.

The attempt to reorganise the Chilean Economy and subsequently its government process, with only minority support internally and potentially considerable opposition externally, was methodologically flawed. Regardless of the particular cause of failure, it was, cybernetically, bound to fail since its start point was a level of recursion which did not enable the consideration of environmental factors bound to impact upon the outcome of the process.

Ulrich(31) sees Beer's work as "an outstanding example" of the attempt to progress towards "a more adequate systems concept in respect to societal problem solving or planning", with the intent of "contributing significant tools towards the management of complexity in *social* systems." Explicitly reviewing the Chilean experience he saw a preoccupation with the efficiency of production to the exclusion of other social issues. Specifically Ulrich considers that the decentralising potential of the approach was negated by the use of the algedonic signal. This operated in a way which enabled the ultimate authority, the Government, to override or intervene in any lower level decision which had originated an alarm message and to which no suitable response had been given. Thus if a local management decided to ignore an alarm message, deeming it irrelevant for local decision purposes, the message would continue up through the system and local autonomy could eventually be lost to a centralised decision maker. (In theory by these means a Government Minister, or even the President himself, could be making decisions affecting operations at factory level.) Such a mechanism, as well as potentially overloading Senior Management in the event, for example, that the critical variables being monitored are incorrectly selected, or change in such a way

that a mass of algedonic signals are generated, also artificially limits the freedoms of operating managers to work "outside" the critical variables for some local reason. This militates against the proposed worker participative and democratic stance adopted throughout the project. Ulrich(31) states "Cybersyn's alleged goal of devolving power to workers is *not* confirmed by its design. Instead, its strongly hierarchical organisation and its concept of 'autonomy' one-sidedly serve the top decision maker, the Government."

He further comments that Cyberstride would only reveal, the "location of internal symptoms, but not real time explanation of problems nor real time decision making." The management of underlying problems would still require more traditional approaches, analysis, reports etc., the tools perceived by Ulrich to be in use by CORFO. Thus, as a problem recognition tool the Cybersyn project was useful but as a problem solving tool it could not offer assistance.

Cyberstride is seen by Ulrich as having an "unreflective value system" with the controller of its inputs also controlling that aspect. For Ulrich this raises a problem of "potential for manipulation" since control over inputs is the only means of controlling the system's "quasi-autonomy." This is seen as potentially leading to a power struggle for the right to control the inputs, with a probability of "increasing centralisation, corruption and sabotage." The whole system is seen to be open to systematic abuse and manipulation to produce "the desired feedback reports", with Ulrich commenting that "History teaches us that tools which can be abused sooner or later will be abused, be it under a socialist or capitalist government."

Criticism is also aimed at the role of "The Experts" in Project Cybersyn who essentially fulfilled a System Four (planning) function. Ulrich sees that although proclaiming a democratic and participative approach, the experts in conjunction with the government "decided on what socio-economic progress and democratization means" and, "what kind of 'socialism' is good for them" (the people). No mechanism was provided for democratic participation in the selection and design of the cybernetic tools used. To counter this it should be recalled that

the "People Project" would have more adequately addressed this aspect had the project not been halted (by undemocratic process), and, the "worker committees" were involved in the selection of the criteria against which the performance of their production units would be measured.

Ulrich's final criticism is reserved for the exclusion from Cybersyn of "dialogue between purposeful and responsible humans." He sees that decisions, based on the "logical truths" derived from the computer system, drive decision-making throughout and "eliminates the possibility of avoiding hidden political values and social irrationality." It may be argued here that the "Opsroom," while providing technologically based information, ultimately relied on human interaction, and as such allowed for Ulrich's desired dialogue, at least between the decision makers. The proposed, but never completed, feedback loop between Government and people had the potential to support and enrich this dialogue although there is no guarantee that its messages would have been acted upon.

Despite his criticisms, Ulrich regrets the premature end of the Chilean project since this prevented the full implementation and development of Beer's ideas which Ulrich sees as committed to ethical, democratic social ends.

Since the Chilean Project, Beer has continued to develop his ideas and undertaken a number of projects at National level. None have been as substantially reported as this one. This chapter will return to a fuller critique of the model but now turns to some other significant applications.

5.2.2 "Useful or not"

Note 5 to "The Heart of Enterprise"(1) is an account of Beer's extended consultations with a large mutual life insurance company. The intervention is summarised and developed in "The evolution of a management cybernetics process."(32) The interventions stretched from 1973 to 1982.

The company had already been introduced to cybernetics and the VSM prior to Beer's involvement and had realised that a number of the developments which they were pursuing fitted with the VSM approach. Beer's help was sought by the Company to develop their understanding more completely. The model never became fully utilised in the course of twelve interventions but a number of useful "learning points" emerged. Unlike Chile, this was an attempt to utilise the model in a purely commercial context and there was no democratic or aspirant democratic process considered. Help was sought by the Senior Management in fulfilling their management roles, but as with Chile there were pressure groups and power blocks within the organisation.

The first task, in any intervention using the Viable System Model, is to identify the "purpose" of the system, the "System-in-focus." and its contained and containing systems, i.e. the various levels of recursion of the viable system. The Company had attempted this but had failed to reach consensus on these issues, seeing the company as Recursion Zero and its territorial markets and functional activities as System One at that level while imputing different purposes to the activities.

The top management of the organisation had reached their positions via two different routes, insurance sales and investment. The first group saw the total organisation as an "insurance selling" system, the second as an "investment system." Their expectations about the purpose of the system were therefore fundamentally different. The debate about purpose could not be resolved within the levels of recursion recognised, i.e. the Company (0), territorial markets (1). Beer conceived that with the Company at Recursion Zero its System One components were Insurance and Investment and other activities such as marketing territories were contained within these. The link between these two distinct activities had been hitherto established by System Five intervention. There was no "*formal mechanism* " directed to this end.

As the Company continued with its modelling Beer encouraged the resolution of the issue of its nature, i.e. what sort of Company was it? He proposed the drafting of a memorandum called the "Joint Normative Decision" which would "exercise a governing intention for the firm." The argument for this was supported with the following statement:

> 'a great appearance of competence and expected victory in a forthcoming battle might be created by marching soldiers around the battlefield in complicated manoeuvres, digging trenches, shouting commands and blowing bugles. But if the generals have not yet agreed upon the reason for the war, nor identified the enemy, nor formulated their campaign, all of this activity is nugatory'

Despite this proposal, by the end of the third intervention the "Corporate" model had not been completed. A comprehensive modelling of the insurance side had been undertaken but this did not allow the fundamental issue of purpose highlighted in the first intervention to be addressed. This underlined for Beer "the absolute need to determine the total recursive system" before engaging in detailed work, a point that was arguably underestimated in the Chilean intervention. The chance involvement of a member of the top management team in this process served to emphasise to Beer how institutions are, in effect, managed (1 PG 518):

> "We perforce rely on the human genius to know how, precisely to apply itself. This is in reality, all cybernetics apart, *the heart of enterprise."*

The fourth intervention (1976) deals with the nature of the model and the calculation of variety. Here Beer reiterates that the model is not a substitute organisation chart but "an account of the firm's activity in terms of the criteria of viable systems" hence it is not right or wrong, it is more or less useful as an explanatory device.

Under measurement of variety, it is again stated that "the measurement of variety is not an exact science" but an attempt to understand the "variety amplifiers and attenuators whereby the firm meets the requirements of Ashby's law." Beer shows how the number of insurance plan combinations to be regulated is dramatically less than the possible number of plan combinations that can be classified (386 as opposed to 30 million million (sic)). This is achieved by identifying possible sub-types of plan as the starting point for calculation and adding rather than multiplying alternatives. This is represented in figure 5.2 on the next page and explained as follows(1 PG 522):

> "What the new systemic diagram shows is that attention must be directed to the contract: the sub-plan that relates to the individual. But obviously, everyone in insurance knows this already! Then, says the cybernetician with curiosity, why is this not mentioned in the 'bibles', nor reflected in the company's regulatory system (except at local levels), nor matched within the huge computing arrangements? Somehow, that key relationship, which the variety analysis so far shows as *determining* everything else, is spread all over an information system in which all variety sources appear to be combinatorial. .... The argument was that the crucial item in controlling selection entropy is the sub-plan. This is what absorbs the variety of the individual client."

The fifth intervention addressed the total modelling of the company as a viable system. Taped contributions were received from all eight members of the top management group of the Company on both sides of the Atlantic and Beer emphasises(1 PG 530) that "work of this kind requires the full-scale involvement of the client organisation." The results of the intervention were communicated to the team through diagrams and audio-tape and Beer sees that medium as offering

"something approaching requisite variety between human beings who already know each other, and the nuances of each other's voices, that printed reports often lack." This suggests that whilst the model itself may be "technocratic" and somewhat clinical, its practical use in an organisation requires a recognition of human beings and the complexity of their interactions. The modelling process undertaken by the Insurance Company was not comprised of a set of "facts" but of a set of more or less subjective views about the structure of the total system.

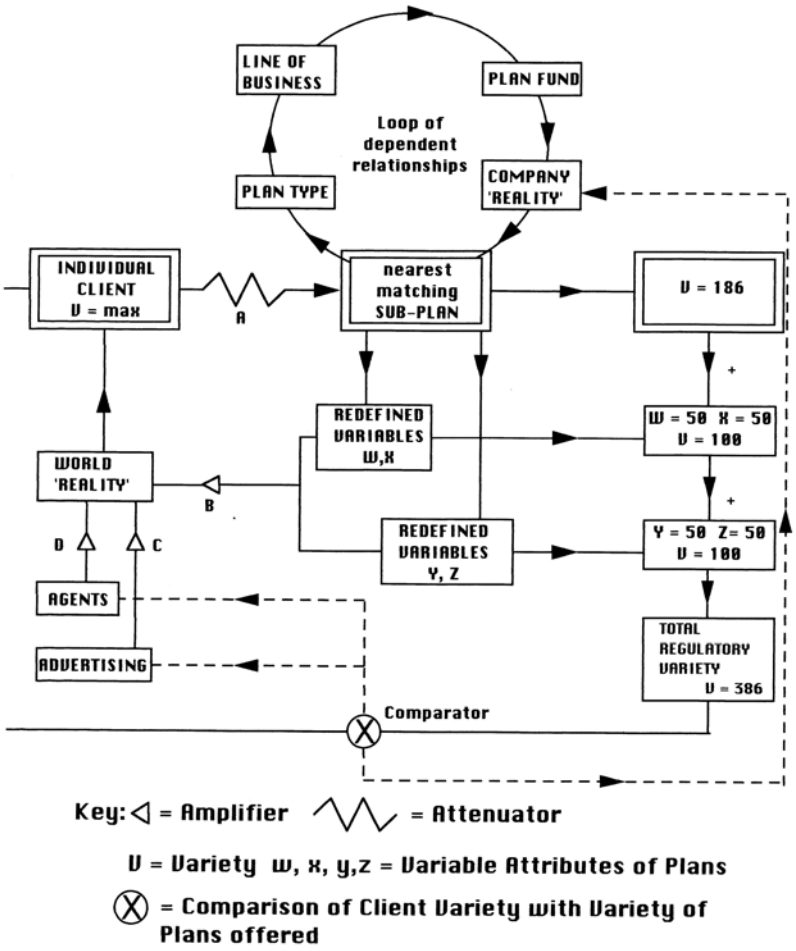

Systemic Diagram for Determining the Combinations of Insurance Plans to be Regulated

(Adapted from Beer (1 PG 523))

Figure 5.2

144

Systemic Diagram for Determining the Combinations of Insurance Plans to be Regulated

(Adapted from Beer (1 PG 523))

Figure 5.2

The sixth intervention highlighted the utility of the model and language of cybernetics for discussing aspects of the viability of a system. Use of the language of viability was seen to free the debate from the influence of "conflict of personalities and the apportioning of personal power"[1 PG 549]. This intervention also focused on the lack of an adequate System Four (Planning) function when an experiment demonstrated that the Senior Management of the organisation had not understood the function of System Four at the Corporate level of recursion.

This aspect was addressed in the seventh intervention. Here Beer[1 PG 552] demonstrates the need for a System Four, on behalf of the system, to engage in what Ackoff[33] calls "idealised redesign." This approach, based on a supposed destruction of the enterprise as it is, calls for a re-conception of the design of the Company based on what is possible given the current state of technology, society, legislation etc. In his argument for an effective System Four, Beer argues that its existence at the Corporate level enables external constraints which regulate the variety of the organisation to be explicitly recognised. This in turn enables debate within the organisation on how to influence the constraints for its benefit.
The second argument for System Four focused on the use of technology[1 PG 551]:

> "I had long been urging the opinion that within only a few years there will be a data-handling revolution that will make the original computer revolution of the fifties seem trivial.
>
> There could be an entirely new method of selling insurance, whereby the high variety of the individual at risk could be matched by requisite actuarial variety carried in a small box of integrated circuits. It was to this possibility that the variety analysis of the Fourth Intervention (Page 142-143) referred. The idea may be vacuous: who can say? What can be said is

that only System Four can handle it, and that System Four is void."

The Insurance Company Management came to see the necessity of an effective System Four and the practical problems of creating it. The proposal was made to create a surrogate System Four at the Corporate level comprising a Policy Group of Senior Managers from the next recursive level and charged with the task of Normative Planning for the organisation as a whole.

The final part of this intervention was the attempt to publicise the cybernetic process within the organisation. This was tried through both a house journal and video and failed. Beer(1 Pg 554) sees this as highlighting the difficulty of inter-recursion communication, saying "Most talk about communications assumes a single level of recursion." This illustrates the point that each level of recursion of the system conducts its transactions in a language which is unique to it. Effective communication across system boundaries requires that messages be conveyed through the transducers in a language which can be understood by the receiving system, without translation error or nuance.

The Eighth Intervention was aborted due to the attempt to merge the subject organisation with another, activity that inhibited the pursuit of the cybernetic process. The experience did highlight two issues. Firstly, in terms of viable systems, a System Four at the subject company emerged from the Corporate Structure despite its apparent lack of articulation within the organisation. Beer sees this as a problem, commenting that(1 PG 556) "If System Four is disseminated, and has no focus, there is bound to be trouble." Secondly, in discussing what is to be called "success", cybernetics was acknowledged to have played a role in the events. For Beer, the perception that this was the case was enough, its explicit acknowledgement being regarded as a bonus.

The Ninth intervention shows Beer arguing for the application of the Viable System Model to the organisation at the formative stage. He attempted to show how it can contribute to the understanding of the need for design of that organisation and how its generality can be utilised to address the questions which must arise.

The Tenth intervention, which followed the collapse of the merger plans, commenced with an enquiry into its failure. An experience from which the Senior Officers of the company wished to learn. Agreement was reached that a formally articulated System Four was necessary to ensure that the whole System remained viable and to prevent its collapse back into being a System Three led organisation. The idea became possible in terms of the people, processes and systems of the organisation. A second theme to the intervention was that the internal structure of the organisation needed to be reviewed to enable the adoption of new groupings of business.

While the completion of these processes is not reported in Beer's study he concludes with two major points in relation to the interventions. The first is that:(1 PG 560)

> "The heart of the enterprise is embodied in its own people. Consultants cannot catalyse interactions that do not exist, or are persistently and perversely held at bay."

The second point is in relation again to success. Briefly reflecting on the outcome he refers to the lack of any formal conclusion and states that "Life is a process, not a justification." This I take as suggesting that the value of the work is in the process that has been undertaken and not in post-hoc rationalisation of the events to show a successful outcome. Perhaps an action only has meaning in its own time and context - its results are neither success nor failure; A Bull's success is a Toreador's failure!

The process of intervention continued and is reported in "The evolution of a management cybernetics process"(32 PP 211 - 270). The Eleventh intervention saw Beer reviewing progress and proposing changes in the effective organisation to enable some degree of autonomy at local levels, proposing investigations which would show how this could be achieved without loss of cohesion in the organisation. The establishment was such that the metasystem for each territorial unit of the organisation was located at Head Office rather than locally and lengthy and numerous interventions had failed to alter this case. Beer concludes his report of this intervention with a quote from the Bible that he sees as an early expression of the Law of Cohesion but which may also be seen as an expression of early systems thinking:

> "For the body is not one member, but many./ If the foot shall say, Because I am not the hand, I am not of the body; is it therefore not of the body?/ And if the ear shall say, Because I am not the eye, I am not of the body; is it therefore not of the body?/ If the whole body were an eye, where were the hearing? If the whole were hearing, where were the smelling?/ But now hath God set the members every one of them in the body, as it hath pleased him./ And if they were all one member, where were the body?/ But now they are many members, yet but one body./ And the eye cannot say unto the hand, I have no need of thee: nor again the head to the feet, I have no need of you."
>
> 1 Corinthians 12, 14 - 21

This argues the case for the interdependence of sub-systems in the creation of the whole and also for local autonomy of action within the constraint of continuing to belong to the system.

Throughout the Twelfth intervention attempts to focus System Four activity in a coherent manner continued without success, albeit some experiments were undertaken in which the assumptions of the insurance industry were questioned. The subject company did acquire another company although Beer comments that "the absence of System Four thinking was stark"(32 PG 265). No statement was given by the company demonstrating why the acquisition was desirable or what benefits were expected, the President even being quoted as stating that no cross-fertilisation of each other's business was planned.

During the period of the Thirteenth intervention the International Head Office was finally separated from the Operating Headquarters of the Company in Canada, an implementation which, whilst long urged by Beer, is seen by him as an expression of *"real-politique"*. The development of a full and coherent cybernetic plan at this stage led to an elaboration of the model from several different perspectives seen as orthogonal dimensions of the whole. The three dimensions chosen were, operational, people and financial, being three different accounts of the organisation at each recursive level. Figure 5.3 on the following page, taken from Beer, shows this orthogonal mapping. This multi-dimensional view is continued in later applications where various authors have examined organisations through the model with various perspectives, e.g. as Information Systems, Quality Systems etc.

The Fourteenth intervention saw the conclusion of Beer's work with the Company. Reflecting on the overall process Beer considers that the failure to articulate an adequate System Four or to find a candidate to take on that role may have been inhibited by his presence in the company undertaking that role, the impact of the observer on the observed! This final thought suggests that the consultant intervening in a situation must have great awareness of the impact of his presence. Perhaps his/her role should not be prime in the intervention but supportive to it, aiding the internal management in the development of their own process of enquiry rather than leading that enquiry for them.

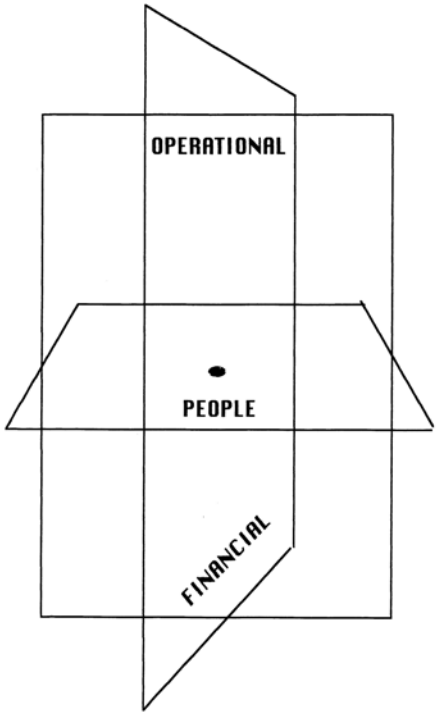

Key: Different Organisational Dimensions of the Whole System

Intersect of the three perspectives

Orthogonal Mapping of Different Perspectives of the Whole System

(Adapted from Beer (32 PG 268))

Figure 5.3

151

Orthogonal Mapping of Different Perspectives of the Whole System

(Adapted from Beer (32 PG 268))

Figure 5.3

5.3 Say Aaah!: Diagnosing the System

The review so far has concentrated on two of Beer's own applications and published criticisms. This section will examine applications by others and looks at the use of the VSM as a diagnostic and conceptual tool.

The initial methodology was published by Beer in "Diagnosing the System for Organisations"[3] and has been given definite form by Flood & Jackson.[5] The diagnostic approach commences with the belief that the VSM provides an account of a healthy organisation. The procedure requires a modelling of the organisation as it is, in order to reveal aspects of its design which do not meet the requirements of viability, i.e. a comparison of a perceived organisational reality with a cybernetic ideal. Solutions emerge from this comparison process as flaws are revealed. At the end of the process there is arguably little need to identify solutions to problems, the solutions may be self-evident or the problems resolved in the process of intervention.

5.3.1

Espejo,[34] a keen proponent of Beer's work who was extensively involved in the Chilean Experience, used the VSM in 1978 as a practical diagnostic tool in an engineering business. The Company, P.M. Manufacturers was suffering from poor productivity, falling liquidity and falling sales. Espejo's intervention showed how the VSM could help to recognise ineffective structuring of the organisation, poor communication channels and the necessity for operational elements of the business to have the discretion and autonomy to fulfil their expected functions. Elements of the corporate level of the organisation were seen to be performing inadequately. This was seen to be because they were attempting to absorb variety which should, in cybernetic terms, have been absorbed at a lower level of recursion. This had a double impact of inhibiting the performance of the lower level

managers who had no autonomy, and the senior managers who were swamped with low level information.

Concluding his paper, Espejo highlights the structural weakness of the company that was constraining the ability of its staff to solve their own problems. He points to the lack of shared identity throughout the organisation. This he saw as limiting its organisational capacity and as responsible for the lack of adaptive and control capabilities at the corporate level. His study closes with practical implications for the company. This application shows the applicability of the model in resolving problems facing a small company, emphasising its practicality and generality for a range of organisational situations.

5.3.2

Flood & Zambuni(25) and Beckford(35) have utilised the model in situations of organisational crisis. Whilst Beckford's intervention is fully explored in Chapter 8 of this thesis, that of Flood & Zambuni will be briefly reviewed here.

This application was undertaken in what the Western World considers to be a lesser developed country still struggling to obtain political and economic stability and with a generally under-educated workforce that led to an autocratic management style. Corruption was rife throughout the country and there was a high level of black-market activity. A major thrust of Flood & Zambuni's work was to challenge the autocratic management with a "more liberated democratic management style for these largely potentially capable staff "from all races"." The subject company operated a safari tour business.

While some control and monitoring mechanisms were in place these were ill-used and their value not understood. Poor control of costs and bookings in the previous season had led to losses. Staff/management relations were poor, aggravating

feelings of neglect and victimisation at operational level. Financial control and monitoring mechanisms, whilst comprehensive, were limited in use by poor understanding and time lags.

Flood & Zambuni saw the situation as one of incipient organisational collapse with the Company unlikely to survive through the next high season. Total Systems Intervention[5] provided a metamethodology for this intervention and the VSM was selected as the most appropriate approach to a situation where urgent action was required. General agreement had been obtained about the purposes and goals to be pursued, and, in a turbulent environment, rapid adaptation and learning was essential to enable organisational survival.

The methodology for the intervention followed that proposed by Beer[3] and adapted by Flood & Jackson.[5] The intervention proceeded with the identification of the recursive structure of the organisation, promoting a degree of local autonomy. This was supported by the development and implementation of new procedures for the operation and development of the Company and, perhaps in the context most importantly, a programme of education for the workforce aimed at increasing skills to enable them to exercise their new autonomy in a competent manner.

This application perhaps reflects Beer's admonition to "Act Fast" or as Flood & Zambuni put it "Organisation now or bust!" and demonstrates the speed with which a Viable Systems Diagnosis can holistically address a problem situation and generate implementable proposals for change. The whole intervention took place in under two months for an organisation of nearly 200 people.

5.3.3

Espejo[36], Schuhmann[37] and Latin,[38] have each shown how the Viable System Model can contribute to the design and implementation of Information Systems.

Espejo,[36] in a "personal interpretation of aspects of Beer's work," examines the need for managers and designers of information systems to understand what constitutes information at any particular structural level. He points to the need to discriminate information for control from information for policy making and highlights the limited information processing capacity of individuals. The underlying model for this interpretation is the Viable System Model.

Discussing "information dilemmas" Espejo shows that Senior Management decisions are often forced by the information provided from lower levels, such that the Senior Managers "feel that they are rubber stamping what has already been filtered for their consideration."[36] He then moves on to show that "an information gap is inherent to management" and suggests that this should be explicitly recognised and accepted. Whilst acknowledging that inadequate use of information does not stop organisations "defining policies and implementing complex tasks" he does question whether the resource cost arising from poor use of information is too high or if this threatens the viability of organisations in turbulent environments.

Referring to the self-awareness and purposefulness of individuals in social systems, Espejo suggests that these factors define information for the individuals concerned. There are also a range of transactions with "potential informational value" with which an individual cannot deal and which, if they cannot be managed within the autonomic level of the organisation, are transactions for which there is no control capacity. Espejo proposes that "this implies the necessity of autonomy within the system, that is, the ability from within to give closure to information loops, with no reference to the above managerial level." He draws four conclusions from

this part of the work; the more variety that is absorbed within the system, the less information is needed by managers to exercise control; the more ambitious the proposed level of performance, the more transactions have to be absorbed within the system; the balance of the organisation with its environment will be largely determined by the effectiveness of its organisation; the mechanisms coupling managers to the systems they strive to control need to be better understood and information systems should make this possible.

Arguing that "the capacity to define policies" is essential at all structural levels of organisation, Espejo proposes that policy making is a conversational process taking account of relevant but filtered internal and external information. He proposes that the filtering mechanisms must be properly constituted and designed so that information is balanced and that decisions are not biased by undue emphasis of either source of information. Parallels are drawn between these mechanisms and Systems 3-4-5 of the Viable System Model.

Examining internal control, Espejo shows how the control function both filters and controls internal transactions and that the need of a control capacity leads to a control dilemma arising from unfolding complexity within the system and inadequate "managerial theory in use." He suggests that, in a turbulent situation, greater flexibility is needed and larger information gaps are inevitable while the normal managerial response is to consider that the system is out of control and to tighten controls thus reducing flexibility. Espejo proposes that a better response is to maintain local autonomy but provide a powerful co-ordinating mechanism that will enable local managements to behave in ways which are consistent one with the others. The control mechanism may then monitor and audit the system for consistency rather than directly control the operations, inducing higher degrees of self-regulation at the lower level. This Espejo compares with Systems 3-2-1 of the Viable System Model.

Espejo concludes his paper with guidelines for the definition, design and implementation of information systems and these may be summarised as follows:

> Consistent development of co-ordination systems across divisions enables a larger acceptable information gap between the controller and the controlled. (System 2)
>
> It must be possible to audit the integrity of inputs to the system and thereby enhance the information available at higher levels of the organisation. (System 3*)
>
> Management Information Systems must enable rather than constrain the conversations between the control and intelligence functions. (System 3-4 Homeostat)
>
> Management Information Systems and co-ordination systems must be available at all structural levels of organisation. (Recursion)

This work has shown how the concepts of the Viable System Model can contribute to Information Systems design.

Schuhmann[37] reports the use of the VSM as "an all encompassing and comprehensive framework" for establishing an information systems strategy in the film division of Hoechst AG. This comprehensive application of the model demonstrates its practical utility and the importance of the people in the organisation to its successful use. Schuhmann shows how the Viable System Model provides a language which enables competent discussions between the participants in the organisation and makes it possible to consider shared values in problem solving and information systems design. He concludes that the model highlighted that:

"Management must accept certain laws about the nature of complex systems."

"We can, however, utilise this knowledge consciously to design organisations and decision-making processes."

"This approach enables an increase in the effectiveness of the management processes."

"Decentralised decisions do not give rise to loss of control."

"Based on (our) *Guiding Principles,* strategies and operational actions are moulded into plans which can be considered as agreements pertaining to intended objectives and resources, and as a method of communication they guarantee organisational cohesion."

"The essential variables are identified and monitored by the structuring of an architecture for the MIS which is homologous to the VSM."

This integrative application brings together the theoretical importance of a properly designed MIS, as proposed by Espejo(36), and its practical application to support the ongoing managerial activity of an organisation with demonstrable benefits.

Latin(38) shows how cybernetics and control theory, articulated through the VSM could provide a common language and architecture for the design and development of network systems. He argues the necessity as arising from the increasing range and incompatibility of information systems and communication devices, suggesting that from a Viable System perspective, "the majority of so-

called integrated networks today are in a state of quasi-chaos, whatever their operations managers might wish to say in defence."

Latin proposes that the VSM offers an opportunity to develop a "DNA" for network systems enabling recursive standardisation of components, protocol and information transfer. While his conclusions are principally suggestions for further work in the field, the paper overall suggests that the VSM may be useful as a framework of thought in this regard. It has possible consequences for greater economy and effectiveness of network system design and control. It is certainly the case that as more organisations become totally dependent upon their information systems, e.g. Banks and Insurance Companies, the necessity for effective information management becomes greater. It must not be forgotten however that while information management is a necessary and supportive aspect of achieving organisational purpose, normally it is not, in itself, purposeful.

5.3.4

Foss(39), Britton & McCallion(40) and Leonard(41), have each made use of the Viable System Model to examine systems which would not, by conventional rules, be recognised as organisational entities.

The application by Foss(39), "escapes the confines of conventional thinking" by interpreting the organisation of a bee-hive as a naturally self-organising, autopoietic and viable system. This is undertaken to pursue the search for "a higher-level of understanding of organisation." Foss refers to his account as a "mere caricature" of the reality. However he makes the point that if we measure performance in terms of the "return on the most limited resource," in the particular case energy, then the bee colony through its effective organisation obtains a return of 29 kilocalories of food energy for every one kilocalorie expended. This is four times the effectiveness of a foraging bushman and ninety times as effective as modern agriculture. Whilst

acknowledging the differences in freedom of behaviour between man and the bee, Foss nonetheless suggests that the effectiveness of its organisation should be admired.

Britton & McCallion(40) used the Viable System Model as a diagnostic tool to suggest changes in Government Policy to increase the viability of the New Zealand trade training network. In this case while each of the entities involved "belonged" to the network they did not comprise one hierarchical organisation and the dominant approaches to organisation would not have enabled this comprehensive investigation. The examination excluded some influential bodies whose contribution could not be investigated within the terms of the research project and focused on those which were "the most conspicuous .... and those most frequently criticised." The contribution of this application in appreciating the Viable System Model was to show that it could be applied to a diverse network of "around 300 committees, quangos and government departments" and generate useful and usable results. Britton & McCallion suggest that "the diagnostic power of Beer's model can be appreciated."

Leonard(41) uses the Viable System Model to examine the place of the television station in United States commercial broadcasting. This is a further interpretive application to a system which may be considered as conceptual. The organisation of broadcasting is composed of a set of interacting but separately owned or controlled entities, the system is created by the relationships that bind the entities together. Leonard emphasises that the purpose of television may vary according to the commentator/observer but in her paper selects the television station as the "system-in-focus." She considers its relationships with its owners, network affiliates, regulatory agency and the community. Her examination shows how the Viable System Model can be used to examine, in this case the television station system, and its contained sub-systems, as part of different chains of higher recursion.
Leonard's conclusions show how the Television Station is constrained from fulfilling a social role in "linking people with their environment" by the forces of marketing

and hence loses interactive variety. She considers that the whole future of television is threatened by its isolation from its consumers and its emphasis on short run ratings as measures of success. This, she considers, inhibits risk-taking and the development of more qualitative measures of programme value.

The contribution to the use of the Viable System Model rests in two areas. Firstly in highlighting the diagnostic power of the model to address the problems of a conceptual system. Secondly, to demonstrate the ability of the model to allow a single organisation to be viewed from a number of different perspectives yet still produce practical proposals for organisational reform. This theme emerges through Leonard's paper with emphasis in the conclusion of the need to utilise the model further to examine the nature of communication, its structure, context and accessibility in contemporary society.

5.3.5

Holmberg(42) demonstrates the use of the model in supporting a programme of decentralisation at ASSI in Sweden. Holmberg recognised increasing levels of education and internationalisation affecting ASSI. Together with the Company's Senior Management group he utilised the Viable System Model to help in expressing to all employees the philosophy of the organisation and in achieving an acceptable balance of autonomy and control in the organisation. In applying the VSM, Holmberg and his associates sought to create a normative model for the employees. This described how they ought to behave to support the achievement of organisational viability. This led to emphasis on delegation of authority, increasing adaptability, formulating and preaching(sic) key ideas and showing 'heart.' The emphasis being supported by three key words of Quality, Training and Information, and seeking to attain a position where the information needed to undertake a task was available to those responsible for the task, who, in turn, had the requisite skills to make competent decisions.

Whilst not a completely trouble-free implementation, Holmberg considers that the project was successful overall in achieving many of the changes required, including a return to profitability, which he sees as the 'acid test.' A number of difficulties were encountered including the tendency to isolation of newly autonomous groups with emphasis needing to be placed on the need for cohesion of the total system to counter this. Human difficulties were experienced in achieving understanding of the advantage of delegating authority. Achieving full co-operation between autonomous units for synergistic benefit proved difficult and the language of the model did not become a part of every individual's vocabulary.

Role confusion was an initial difficulty with staff not understanding that they may act in more than one system as opposed to sitting in one box as with a conventional organisation chart. Stress was required on the interdependent nature of the systems. Finally, Holmberg states that the organisation can see how the new generation of middle managers are becoming action centred rather than as previously "waiting for their marching orders".

5.3.6

Ben-Eli[43] reflecting on his application of the VSM to strategic planning and reorganisation of a medical centre, considers that the model contains concepts which "are invariably comprehensive enough" to absorb the dynamic behaviour of individuals in organisations. He suggests that they enable the clarification of the "amorphous cloud" in which the structure of the organisation its people and processes are contained. He suggests that while the VSM offers an "excellent metaphor" for the process of interactions and communications that bind individuals together in the organisation it must be emphasised that the model must not be mistaken for "the real thing!"

Ben-Eli proposes that the model-user combination is crucial and that the Law of Requisite Variety must apply to this combination. He suggests that in order to succeed, the process should be constructed to embody the principles of viability and should become an integral part of the management processes that are being described. He emphasises, with Beer[3] that the model should be used in a creative and innovative way to amplify its variety, rather than literally and pedantically. The role and importance of the individual in the organisation is highlighted, stressing that "in every human organisation, the basic unit of autonomy, the ultimate recursion, is the individual himself."

5.3.7

Walker[44] demonstrates the use of the Viable System Model as a device for effective organisation in a large co-operative where the political principles of the members militate against the creation of any form of managerial hierarchy. The VSM was used to create a Hub-Sector system whereby the Sectors and individuals maintain maximum autonomy consistent with systemic cohesion. Metasystem decisions are made by delegates from the Sectors whose function is to represent the views of his/her Sector at the Hub meeting. Reporting back by the Hub delegate to the Sector ensures closure of the information loop and "It is virtually impossible for any member of the Hub to grind his or her own axes, as they know that a few days later they will be scrutinised by a Sector to ensure that they have adequately represented their views."

The non-hierarchical nature of the organisation meant that the implementation of ideas arising from the VSM could not be forced and, at the time of Walker's paper, was not complete. Nonetheless the VSM enabled the creation of a "Senior Management" mechanism. This he considered to enable the effective management of the Co-operative whilst maintaining a fully democratic decision-making process.

This application perhaps adheres most closely to some aspects of Beer's ideal organisation whereby the "people" provide closure to the system at the highest organisational level. This echoes the unachieved aims of the Chilean intervention which ceased before Beer and his colleagues could develop the Government-people informational loops which had been proposed and experimented with.

5.3.8 Summary

This section has reported the major published applications of the Viable System Model over the last twenty years, identifying the major lessons which have been learned from each one. It is opportune to note that despite the wide ranging nature of the applications undertaken and reviewed here, the final work from Walker(44) should carry such strong echoes of the initial work undertaken by Beer in attempting to devise a management process which reflects the wishes of "the people."

5.4 Developments

This section of the Chapter briefly reports developments and interpretations of the Viable System Model, showing how it can contribute to the understanding of organisations from a range of differing perspectives.

5.4.1

Clemson[20] reviews the whole cybernetic approach. He seeks to demonstrate that "Management Cybernetics establishes the fundamental principles and provides limits on what is and is not possible for organisations." He suggests that cybernetics provides the science for the art of management in the same way that physics provides the science for the art of designing bridges.

Seeking to make this "science" accessible to Managers, Clemson provides practical assistance in using the Viable System Model as a tool for problem solving and organisational design. His work is non-mathematical, emphasising that "*if the problem is adequately formulated* it is relatively easy to select the requisite technical expertise." This reflects the "diagnostic" approach adopted by Espejo, Flood & Zambuni, Britton & McCallion and others, comparing a perceived situation with an idealised conception of that situation (the Viable System Model) in order to identify the need for redesign of aspects of the system being studied.

Clemson concludes by showing the use of the VSM as part of the ongoing process of organisational learning and management. He points out that "managers will use the models only if the models are their own and if the information system meets *their* perception of utility." This emphasises again, with Beer, Ben-Eli and Walker the importance of the individual in the successful utilisation of the VSM.

5.4.2

Beer[3] and Flood and Jackson[5] have provided methodologies for using the Viable System Model which were noted in Chapter Four. Espejo[45] and Espejo & Harnden[46], cite the abstract nature of the model. They highlight the ability to use the VSM from a variety of different perspectives, e.g. as a diagnostic tool for organisation structure, a conceptual model for information systems design, a method for assessing the organisational impact of alternative policies and for designing, and building flexibility, into, large organisations.

Espejo regards organisations as "not single systems but multisystems, being the outcome of the negotiations of multiple viewpoints." He goes on to argue that an examination from a single viewpoint is "bound to fail because it lacks in multisystemic variety." He proposes that the identification of a system and its purpose must be pursued at the commencement of an intervention through a "soft systems" approach, such as Checkland's Soft Systems Methodology(47) and that this aspect should be revisited at appropriate times throughout the period of intervention. He asserts that the resolution of the organisations identity (purpose) implies the structure which is effective for it. It can certainly be argued that the identification of purpose will determine which activities are regarded as being "autopoietic" (producing the system) and at what point these activities become pathological.

Espejo's second concern is with the identification of recursions of the system, i.e. those "activities which fall within the regulatory capacity of particular managerial levels." He sees two modes of approach to this, diagnostic (for fault rectification) and prescriptive (for design). Identification of recursions is a key determinant of the complexity (variety) with which any given managerial level must deal. Espejo considers that the VSM helps the intervenor to identify the "more effective" divisions of the structural levels but warns of the danger of confusing "complexity that the individual managers should see" with "complexity that they appear to see." This point reflects the difficulty experienced by Beer when seeking to resolve this issue during his extended intervention at an Insurance Company.

Espejo, with Beer, emphasises the prime nature of the activities which fulfil the organisations purpose in this context. Whilst Beer emphasises that contained viable systems must, in principle, be capable of independent existence, i.e. they could be separated from the main body of the organisation and continue to exist, Espejo(42) refers to "all those activities which, in the framework of the currently agreed identity

for the enterprise, have a transformation of their own. If hived off they would not lose the content of their transformations."

Referring to the possibility of a number of interpretations and influences on the decision about recursive levels, Espejo concludes that, in a diagnostic study, the structural position of a sub-system is "defined *de facto* by its relationship with other primary activities." In a design study, "the modelling of primary activities should be done with the support of expert advice. Alternative decomposition's of the organisational tasks will depend upon both the technologies-in-use and the control strategies."

Whilst proposing the rule that:

> "Partitioning of primary activities should aim at achieving a balanced distribution of complexity along each of the lines in which complexity unfolds."(45 PG 380).

Espejo acknowledges that particular strategic requirements or technological implications may demand that it not be applied, and, that structural position may alter over time with an increase or decrease in the complexity being managed. This leads back to the suggestion that, whilst the identified sub-system must be in principle "capable of independent existence" to be considered a viable system, its position in a modelling of the organisation will be contingent upon the views expressed by the participants in the intervention and the degree of "usefulness" of the model so derived.

5.4.3

Britton[48] proposes the joint use of the Viable System Model with Ackoff's Interactive Planning[33] suggesting that, "A more potent combination for developing an organisation is difficult to imagine." He proposes that either the VSM can be embedded in the process of Interactive Planning, or that Interactive Planning can be used to support an intervention using the VSM.

Flood & Jackson[5] indicate in the grouping of types of systems methodologies that the Viable System Model be used in complex-unitary situations. That is, those where there are "many elements in close interrelationship, exhibit probabilistic behaviour which is difficult to predict, are open to the environment and include purposeful parts. There is, however, assumed to be general agreement about goals to be pursued." Interactive Planning on the other hand is proposed as a methodology for "complex-pluralist" situations, those where there is "a lack of agreement about goals and objectives amongst the participants concerned, but where some genuine compromise is achievable." Checkland's Soft Systems Methodology is also in this category. This difference in perception of the situational utility of the various models does not, for Flood & Jackson, mean that they are mutually exclusive. Their process of "Total Systems Intervention" enables and encourages the use of methodologies in a complementary manner.

Britton's proposal is also supported by Espejo's work which suggested the use of a "soft systems" approach, in his case Soft Systems Methodology, interleaved with the use of the Viable System Model. After establishing the relationship between the Viable System Model and Interactive Planning, and discussing the role and essential skills of a consultant, in particular the ability to "motivate people to plan for themselves", Britton proposes a 15 step iterative methodology for their joint application. This methodology with Beer, Ben-Eli, Espejo and Walker emphasises the importance of the individual in the process of intervention. Britton augments the proposal to include internal stakeholders with the suggestion that external stakeholders such as customers, suppliers, debtors and creditors should also be considered and their views of the organisation understood.

5.4.4

Harnden[49] argues that organisations and their environments are "structurally coupled." For Harnden this means that, rather than an organisation seeking viability in a dynamic interaction with its environment, perhaps in the form of a battle, "viability is indicated as a satisfying embrace of, or a coherent dance with, that world."

He uses this base to propose that System Four, rather than being seen as containing a model of the organisation and its environment, is viewed as a modelling facility. This is provided by "instruments" with an interpretation of the organisations posture in relation to its environment. The modelling facility enables the organisation to adapt that posture to achieve a better "fit."
Concluding a closely argued section on the nature of the Viable System Model, Harnden proposes that the user may either choose to interpret it as a model of some objective entity, or as "an algorithm for a quality of control that emerges out of and in turn enables a valuable *heuristic for structural coupling*, specifically in terms of our own efforts to coherently orient ourselves within our own cognitive space."

Harnden[50] returns to this theme. He proposes that the Viable System Model provides a language and set of conventions within which it is possible for a variety of views to be exchanged with relation to a system in order to achieve a "consensual domain", a continuously negotiated agreement between observers of "what is." This, for Harnden frees the model from the constraint of trying to describe an "object" or "entity" and supports its use in the more interpretive sense demonstrated by Leonard, Britton & McCallion and Foss.

5.4.5

Schwaninger[51] uses the Viable System Model as a guide to defining organisational fitness. He criticises traditional metrics such as profitability and share price as "inadequate measures of organisational effectiveness," saying that, "They are, in principle, no more than short-term indicators of business achievement." He suggests that "assessing the effectiveness of a business by the level of its profits is similar to drawing conclusions about what season it is by measuring the temperature. For this aim, the calendar, and definitely not the temperature, would be the appropriate source of information."

Arguing that increasing environmental turbulence has rendered traditional methods derived from accounting procedures less able to help the organisation survive, Schwaninger proposes that "a new understanding, rooted in a more comprehensive view of organisational fitness, is needed." He considers that what he calls management, and this thesis with Jackson[17 PP 102-104] calls, organisational cybernetics, and planning theory, taken together can contribute to this understanding.

He then shows how cybernetics and systems ideas can underwrite "systemic effectiveness" at three levels of management, operational, strategic and normative, suggesting different criteria of organisational fitness at each one:

> "At the operational level, it is the criterion of economic efficiency/profitability.
>
> At the strategic level, capability in the competitive and in the co-operative senses, and
>
> At the normative level legitimacy, defined as the potential to fulfil the claims of all relevant stakeholders."

He sees the "key duty" of an integral management as being to meet these three criteria "in the long run" and that the control systems suggested by the Viable System Model can contribute significantly to this.

Schwaninger then provides a brief example of "organisational fitness in action" demonstrating how an organisation using this approach had maintained its strategic direction despite short run difficulties, such as low profitability at a time of high investment need, and in so doing had supported its own long term viability. This may be compared with the more conventional approach seen in most organisations where the emphasis on short run profitability inhibits the fulfilment of longer-term needs and thereby threatens or destroys the organisation.

The work concludes with a reiteration of the criticism of low-variety models used in business administration and re-emphasises the need for richer and more adequate control and development mechanisms. Schwaninger proposes the Viable System Model in this role since, inter alia, it enables organisations to adapt their structure to changing needs in a self-aware manner. It provides both short and long run control systems and it provides a conceptual framework for adaptation and learning, leading to a new understanding of "organisational fitness."

5.4.6

Espejo and Schwaninger(52) return to this theme with a diverse collection of works on "Organisational Fitness" which aim to underline the contribution which Cybernetics can make to the viability, in its wider sense, of organisations. Espejo(53) emphasises again the methodological need to "ground the model in the reality of the people affected" and sees this as vital to successful use. Recognising the contribution of "soft" methodologies to this process he states that "the cybernetic methodology braids action and structure into an integrated framework for problem solving."

5.4.7

Malik[54] after arguing the need for the practitioner to properly comprehend the meaning of the Viable System Model, also emphasises the importance of involving the people in the diagnosis and redesign of an organisation. He states "The more people have been involved in the process of discussing their system, the easier it (implementation) is." Malik's application was undertaken in what he refers to as "Trojan horse" style, revealing the model only after using it for two years to guide his intervention.

5.4.8

Flood[55, 56, 57] demonstrates the contribution that Viable Systems thinking makes to the contemporary pursuit of Total Quality Management, a particular approach to organisational fitness. He shows how an "appreciation of viability" can be used to interpret the principles of achieving quality, an achievement which many organisations see as fundamental to their long term development.

Flood shows that the "Intelligence function" of a Viable System can be used to focus on prevention rather than cure, to enable "planned management action", and to identify customer requirements which can be met, "first time and every time," through effective co-ordination and control systems which emphasise organisation to achieve objectives. He shows how the "audit" system helps to reduce waste and total costs and how real-time control enables effective decision making. Participation is encouraged to ensure "total" involvement in the quality process and measurement of achievement is undertaken through Beer's performance indices of actuality, capability and potentiality. Finally, creativity and continuous improvement are enabled by the creation of a system which has at its core mechanisms of adaptation and learning. Flood concludes by arguing that viability and quality imply each other in a complementary manner such that a viable organisation will achieve

quality and a quality organisation, adhering to the principles which he elaborates, will be viable.

5.4.9

Gomez[58] examines the need for autonomy of organisations from their environment and within the organisations themselves. Autonomy of organisations is considered to be a function of achieving "an optimal mix between responding to the environment and differentiating itself from the environment." With Harnden, Gomez seems to be arguing the need for organisational balance, Harnden's "satisfying embrace" or "coherent dance."

Looking at internal autonomy, Gomez acknowledges the historical arguments for centralisation against de-centralisation and points to the lessons to be learned from political federalism and "the organisation of autonomy" implemented by Sloan at General Motors. Again he argues that the need is for an appropriate degree of autonomy to enable the system to fulfil its purpose. He cites the Viable System Model as "the most developed approach" reflecting the idea that "problems should be solved at the place of their occurrence," and supporting the basic principle that "the autonomy of organisational units is a variable which should depend on environmental developments and the interests of the whole. This can be seen as a restatement of Beer's requirement that "The metasystem ..... should make only that degree of intervention that is required to maintain cohesiveness in a viable system."[1 PG 158]

5.4.10

Semler,[59] Gottfreund[60] and Seara[61] each show how the ideas of Viable System thinking have contributed to the achievements of their organisations.

Semler reports the recovery and survival of his organisation founded on changes in its management concepts to employ three key values, democracy, profit-sharing and information. In this case, the business was restructured to create autonomous units on a human scale (System One Elements) and the traditional hierarchy was overthrown in favour of an "organisational circle" which reduced the number of management layers. This change was supported by a change from having supervisors of units to co-ordinators (System Two); reward systems were changed to enable careers and salaries to be enhanced without the need for a hierarchy of management. Subordinates evaluate managers on a regular basis and anonymous audits of staff attitudes to the organisation are undertaken (System 3*). Important decisions are taken on a collegiate basis (System Four, environment for decision) and some are made by company wide vote (System Five - Identity - Democracy - "El Pueblo") including instances of the proposed acquisition of another Company and a new factory. This participatory stance extends to sharing of information and an expectation that staff will use their common sense to determine their behaviour, rule-books and regulations have been abolished. Structures of work groups are not imposed from above but are allowed to emerge from the group in a natural manner. Finally, planning and budgeting are ongoing adaptive processes that reflect the ongoing state of the organisation which is thereby working, as nearly as possible, with "real-time" information. Staff functions have been abolished.

Whilst this is not an explicit use of the Viable System Model, it is relatively easy to see how its major principles have been utilised to good effect by this organisation. Particularly interesting is the participative "humanitarian" use of cybernetic principles which is also shown in the work of Gottfreund(60) who emphasises, with Schwaninger, the interrelatedness of Normative, Strategic and Operational management .

Seara,(61) more explicitly using the Viable System Model, records its use to distribute control throughout his organisation. This detailed application shows how

the various sub-systems of the organisation function together in order to achieve objectives, in particular the "intensive interaction" of the control and intelligence functions.

5.4.11

Bowling and Espejo[62] demonstrate the Cybernetic Methodology as a "soft" approach to an organisational situation, already espoused by Espejo and Britton, as necessary to support and enable agreement about, and understanding of, the issues to be addressed, participation and implementation. This provides for an iterative enquiry-learning loop enabling explicit discussion of different viewpoints and interpretations of the organisational situation. Bowling and Espejo conclude that the value of the Cybernetic Methodology is in its heuristic power and not its step by step application.

5.4.12

Concluding their work, Espejo & Schwaninger[52] reaffirm that, for them, organisational effectiveness can no longer be measured purely in terms of profitability. They consider that viability demands not just survival but "control by transformation" and "control by development", restating that organisations both influence, and, are influenced by, their environments and suggesting that the increasing complexity of a world linked by global communications demands better organisational models and managerial processes. They propose that organisational cybernetics can contribute to the search for increased effectiveness but that the need for "visionary leadership" cannot be provided by these processes, they simply make such leadership more possible.

5.4.13

Britton & Parker[63] is used to close this section on developments of the Viable System Model. Working from the general model they have developed a particular version, known as the "Project Management VSM" for use in the diagnosis and design of project management systems. Whilst the logic, connectivity and structure of the original model has been maintained the specific language of Project Management has been utilised for descriptive purposes. The development methodology for this model is drawn from Beer.[26]

Although this development has been undertaken to assist in a particular case it underlines again the generality of the Viable System Model and its applicability to a wide range of organisations. Perhaps the most significant point is that traditional management approaches work on "snapshot" views of organisation, organisation charts being "frozen out of history"[3 PG i] and describing an inert system, and yet, organisations must be dynamic in order to be viable in an increasingly turbulent environment. Project Management deals with the process of managing change. Managers, through the use of the VSM can be enabled and encouraged to recognise that management is not a series of discrete and independent decisions, but, like Project Management, the process of maintaining organisational viability is a project for "life".

5.4.14 <u>Summary</u>

This section has briefly reviewed the major developments in the use of the Viable System Model, concentrating mainly on "how" it can be interpreted and used, and the adaptations of methodology. Several important themes emerge from this.

Firstly, with Beer, each writer sees people as "the heart of the enterprise"[1 PG 560] proposing a variety of ways of including the stakeholders in the intervention

such as Soft Systems Methodology, Interactive Planning and the Cybernetic Methodology. Secondly, the focus on "organisational fitness" has proposed that traditional measures are inadequate and has suggested ways in which the model can contribute to the total health of an organisation. Thirdly, Harnden has indicated how the language of the model provides a mechanism for enabling agreement about what constitutes the system under discussion. Fourthly, Flood has shown the close link between viability and quality, demonstrating that they imply each other and that quality programmes will fail unless principles of viability are adhered to. Finally, the nature of management as a process has been underlined by the derivation of the "Project Management VSM" by Britton & Parker.

5.5 Criticisms

This section reviews the principal criticisms of the Viable System Model, taking account of the Applications and Developments already examined.

5.5.1

Jackson,[64, 65 & 17] Flood & Carson,[10] Flood & Jackson,[5 & 66] Morgan[67] and Ulrich[31] have all critically reviewed the Viable System Model. From these reviews, eight points dominate and were recorded under three headings as follows by Flood & Carson[10 PG 98]:

Methodological

"1) The cybernetic model is often accused of adherence to misplaced mechanical and biological analogy.

2) The concept of variety has been criticised as:-

(a) a poor measure inappropriate for scientific work,

and

(b) deficient as it is employed in cybernetics as an absolute, observer-independent measure of complexity.

Epistemological

3) The cybernetic model is held to give an impoverished, or subset, picture of organisations.

4) The cybernetic model emphasises stability at the expense of change.

5) It is dangerous for the organisation to function on a set of *a priori* identified goals in a dynamic environment.

6) The cybernetic model underplays the purposeful role of individuals in an organisation.

Utility

7) Following (6), there are clear autocratic implications when the cybernetic model is used in practice.

8) The cybernetic model is difficult to apply in practice.

In reviewing these criticisms, Flood & Carson utilise the distinction between Management Cybernetics and Organisational Cybernetics drawn by Jackson(17 PP

102-104). The second of these being represented by the Viable System Model and being developed without reference to analogies and recognising the role and impact of the observer. Considering only Organisational Cybernetics, and regarding the prior work that has been reviewed, these criticisms may be examined to assess their validity.

5.5.2

The accusation of adherence to "misplaced mechanical & biological analogy" is seen by Flood & Carson as incorrect for the Viable System Model, it having been derived from first cybernetic principles. Even agreeing with them, it would still be considered that the utility of the analogy as a framework for thinking about a system and for describing its functioning is helpful to both the stakeholders in a system studied and to the observer of that system. It helps to impart "semantic" meaning to communication, the absence of which in the purely synactic messages is criticised by Ulrich(31). Morgan(67 & 68) and Flood & Jackson(5) for example, have made extensive use of metaphors for describing the observed appearance of systems and organisations to aid understanding.

5.5.3

The concept of variety is again defended by Flood & Carson, although whilst arguing that it "adds to the systemic power of reasoning" they "find pointless" the idea of creating an instrument of measurement whose uncertainty of content would necessarily be high. They conclude that awareness of the concept is "the key." Jackson(17) dismisses the criticism of the measure as "obviously misplaced in relation to the VSM." The concept obviously has been considered helpful in various applications of the Viable System Model undertaken and as such should be accepted as useful in appropriate contexts bearing in mind its limitations.

5.5.4

The accusation that the cybernetic model gives only an impoverished, partial, or, subset view of organisations would hold good against any model. A model is necessarily an abstraction from "the real thing" and will necessarily be impoverished when measured against that "reality."

The richness of the model-in-use must be dependent on the skill and craftsmanship of those applying it and, with Flood & Carson, "the people who apply the approach can do so in whichever way they so desire." Beer provides that the Viable System Model offers an account of the organisation, to be "useful"(3 PG 2), the model-in-use must be rich enough to satisfy the needs of those involved in the application. The basic framework of the abstract model is inevitably enriched in the process of use when the various sub-systems of the model are given substance from the organisational context.

5.5.5

The charge of "emphasising stability at the expense of change" cannot be substantiated. The whole point of the model is to assist in the design of systems or organisations capable of learning and adapting in a turbulent changing environment that implies organisational change. The stability that is sought is dynamic stability, or "dynamic equilibrium"(51), that is the organisation adapts to maintain its "balance" in the environment; Harnden's "coherent dance." It is essential that the metasystem functions correctly, i.e. an adequate balancing of the System Three-Four demands, to prevent the organisational boundaries becoming fixed or institutionalised.

Flood & Carson consider that "organisational cybernetics allows for democratic processes which inherently permit dynamic changes of goal" thus avoiding the danger of functioning on "a priori" goals. It may be argued that the super-ordinate goal of a system is its own long-term survival and the Viable System Model sets out the mechanisms by which this may be achieved. The particular lower order goals of organisations to which the model is applied may be seen as objectives towards survival. "The purpose of the system is what it does"[3 PG 99], and, what it does may change in relation to the demands of its environment and itself.

5.5.6

The arguments that the Viable System Model "underplays the purposeful role of individuals" and is open to "autocratic abuse" can be treated together. The model sets out to provide an account of the structure and processes of organisations, i.e. the mechanisms by which they work. Whilst Flood & Carson, with Jackson, consider that it does account, in principle, for the roles of individuals, Jackson suggests that a more explicit incorporation of the nature and organisation of satisfying work would be helpful. As regards autocracy, the proper use of the model demands autonomy at each level consistent with systemic cohesion.

That the model can be used to autocratic ends is undisputed in the short term but, it must be questioned whether such an application would generate a truly viable system, or if it would be, with Beer's wave,[69] "in a state of systemic conflict within it determined by its form of organisation," "a dynamic system in catastrophe, as a result of its internal organisational instability," with, "its destruction built into its organisation." Viability is about long term survival, learning and adaptation; for the system to be viable System Five is required to share the "identity" of System One; in a situation of autocracy, this would not be the case and the system would not meet the established criteria of viability. Similarly, from the Total Systems Intervention meta-methodology of Flood & Jackson[5 PG 42] Viable Systems

Diagnosis is useful in complex-unitary situations, where there is, or can be readily achieved, general agreement about the goals to be pursued. An autocratic system, by definition, does not exhibit this feature.

The history of man is littered with examples of the outcomes of "autocratic" management, such as, the French Revolution, the Russian Revolution and the economic weakness of the former communist bloc countries. These all show the failure of autocratic systems of management which by definition did not adequately take account of the needs and wishes of the people. Similar approaches in industry may be said to have provoked the rise of trades unions and "worker power" throughout the industrialised world in the early twentieth century.

An autocratic management can only maintain its position by a massive attenuation of local variety through the command and audit channels of the system. This inhibits local autonomy in contradiction of cybernetic principles and will be inefficient, requiring massive metasystem forces to "police" behaviour. It will be ineffective because the goals of the stakeholders in the system at the lower levels will not be shared with its "Senior Management." The stakeholders at the lower level may seek to pursue their own goals and to subvert those of the organisation as a whole. Examples of this behaviour can be seen in the rise of illegal drinking establishments during the American prohibition era, and the maintenance of religious faith in Countries throughout the world during periods of oppression, e.g. Catholicism in England, Judaism in Germany.

The accusation that the Viable System Model may lead to autocratic abuse may be correct in the short term. In the long run the system which supports it is likely to collapse as it will be inefficient and ineffective in the pursuit of its goals.

5.5.7

The argument that the Viable System Model is difficult to apply in practice is one which continues. The examples of its application earlier in this chapter demonstrate that it can be used and has been used in a wide variety of situations from nations and large enterprises to very small organisations. The success of these applications does not alter the difficulty of using the model which, because of its requirements, is perceived as threatening the position of those already "in power." This theme is best explained by Machiavelli(30):

> "There is nothing more difficult to take in hand, more perilous to conduct, or more uncertain of success than to take a lead in the introduction of a new order of things, because the innovation has for enemies all those who have done well under the old conditions and lukewarm defenders in those who may do well under new."

There are a number of practical difficulties in using the Viable System Model. Firstly, it requires a new framework of thought about the nature and purpose of organisations and of the individuals who comprise them. Secondly, the language and concepts of cybernetics in general and the Viable System Model in particular are unfamiliar to most people who thereby feel excluded. Thirdly, the diagnostic implications for the elements which comprise the metasystem are likely to inhibit success since these are the people most threatened by the changes and responsible for enabling their implementation, and "passive resistance is the most potent weapon ever wielded by man."(70) Finally, the grant of greater autonomy to managers at the lower level of organisations needs to be supported by higher levels of competence at those levels which carries with it implications for investment in training and education. Western Management and Economic thought still regards training and education as current expenditure not capital investment, and does not recognise that the increase in expenditure to achieve higher levels of education and training may enable an increase in self-regulation (autonomy). The

consequent reduction in expenditure on control activity which should arise from this would be the return on that investment.

5.5.8

Finally in this section, Jackson[71] seeks to encourage the debate between the "structuralist" and "interpretive" views of the Viable System Model. Jackson's preferred alternative is the structuralist view which accepts the subjective, observer dependent nature of systems. This allows the Viable System Model to be used as a tool "to consider the implications of different system identities," and "once a particular identity and purpose have been chosen, certain structural laws need to be obeyed in designing a system to achieve that purpose effectively and efficiently and to maintain that identity." Jackson recognises however that the Viable System Model may "be interpreted differently" and cites the "interpretive" view of Harnden and Espejo, which proposes that "Organisational models should be seen not as seeking to capture objective reality, but as aids to orienting ongoing conversations about complex social issues." Jackson concludes that the "structuralist reading" of the Viable System Model offers the opportunity "to enhance the steering capacities of organisations and societies, and this is central to their successful evolution," whilst soft systems thinking "is not equipped" in this way.

5.5.9 <u>Summary</u>

This section has highlighted the major criticisms of the Viable System Model and considered some of the arguments used to counter them. The criticisms of the use of analogy and the concept of variety are shown to be weak, whilst the epistemological concerns are perhaps more matters of opinion and interpretation rather than "fact" although the charge of emphasising stability (Ulrich) appears to be unfounded.

Autocratic use of the Viable System Model is possible in the short term, but any of man's knowledge can be abused, e.g. nuclear power, psychoanalysis and psychotherapy. The potential for abuse, highlighted at the outset by Wiener[16 PG 38] does not alter the matter of its existence, it merely serves to emphasise that we must learn to use that knowledge wisely, since knowledge cannot be "unlearnt," or "undiscovered." The difficulty of application of the Viable System Model has been suggested to be partially methodological, partially linguistic and partly political, and will vary according to whether the model is used as a diagnostic, explanatory or exploratory device.

5.6 Beer, a latter day Diogenes?[21]

The intention of this section is to briefly explore the philosophy and ideology which Beer reveals through his writing and work. The aim is to show his concern with human freedom and well being.

5.6.1

Diogenes was labelled a "cynic,"[72] literally someone canine or dog like. In the common, contemporary, interpretation of a cynic as someone, antisocial, hostile or misanthropic this label would not apply to Beer. However if we take Russell's[72 PG 241] interpretation of Diogenes' philosophy as being "quite the contrary" of what we now call cynical, then it is easy to accept that Beer is Diogenesean, a radical thinker, proclaiming his brotherhood with the human race. He believes that radical alteration in the organisation and management of society is necessary to prevent its self-destruction, and like Diogenes, he is "a man about whom stories (have) gathered, even in his lifetime."[72 PG 241]

5.6.2

Stating that "I wish that people would refer to my original texts"[73] Beer reflects on the way in which he considers that the Viable System Model has been "misunderstood" as hierarchical, deterministic and prescriptive, continuing, "It is none of these things."[70] My understanding of the Viable System Model has been derived primarily from Beer's original texts and each of these shows in some way his concern with the state of society, its impact on human beings and his perception of the need for radical change before its collapse.

The clearest elaboration of his concern is in "Designing Freedom"[69] in which he explains his position. This sets out what Beer considers as the major threat to freedom, that is the dysfunctional organisation of society and its institutions that he sees as inefficient and ineffective in the service of mankind. He shows the availability of cybernetic understanding and tools to enable necessary changes to be made in an informed manner. Very importantly he argues that science is currently supporting the established order, becoming "oppressive and alienating" except to those who currently hold power in our societies. He shows how science needs to be brought into the service of man through the democratic process, so that we, the people, can be "no longer at the mercy of a technocracy which alone can tell us what to do." Beer illustrates ways in which this could be achieved.

Discussing "The future that can be demanded now"[69 PG 70] Beer reviews the centralisation-decentralisation dichotomy and illustrates again the need for the correct balance of these factors, i.e. central control only in so far as it is necessary for cohesion of the system. This, in the Viable System Model, is determined by the creation of identity in the system, the task of System Five. This identity needs for viability of the system, to be shared with, or in a democracy, determined by, System One. The system can then define itself through the democratic process and thereby the constituents determine their own freedom since they control control. This argues the need for a more effective democratic process than is available in most

nations, although Switzerland perhaps is closest with its federal structure and extensive use of referenda on major issues.

Finally in that text, Beer argues that(69 PG 87) "We can embark on that process of liberation only by constantly and consciously testing the ways in which our personal variety .... (freedom to act in the way that we wish) .... has been and is being constrained by the very things we tend to hold most dear," i.e. our institutions and systems of government. He proceeds with the explanation that freedom does not mean the complete absence of regulation, saying:(Op. Cit)

> "We are not free if we are dumped in the middle of the Sahara desert, despite the absence of walls and bars on the non-existent windows. We are free when the doors of our intellectual suite of rooms are unlocked, and we walk outside to breathe some new and fresher air. But we still need maps."

Reiterating his meaning of "in control" as "ultrastable: capable of adapting smoothly to unpredictable change" Beer proposes his view that cybernetics offers the "maps" necessary for "Designing Freedom," giving this as an "appeal for scientific efficiency, which belongs to the word "designing", as providing a regulatory model to give requisite variety to human joy and fun, which belong to the word "freedom"."

He reviews the discord between these two apparently conflicting requirements as follows(69 PG 89):-

> "There are two things wrong with the role of science in our society. One is its use as a tool of power, wherever that is concentrated by economic forces. The other is its elite image. None of us wishes to be manipulated by power; and if science is the tool of power, to hell with it. None of us wishes to entrust our liberty to a man in a white laboratory coat,

> armed with a computer and a row of ball-point pens in his pocket, *if he does not share in our humanity* (my italics).
>
> The contrasting argument is just this. ..... Civilisation is being dragged down by its own inefficiency. We cannot feed the starving; we cannot stop war; we are in a terrible muddle with education, transportation, the care of the sick and the old; institutions are failing, and often we feel unsafe in the streets of our own cities. All this is inefficient. *Then it cannot be correct to say that the only way to preserve liberty is to be so damned inefficient that freedom is not even threatened. (sic)* We have to become efficient in order to solve our problems; and we have to accept the threat to freedom that this entails - and handle it."

Beer's concern then is that human freedom, for many societies, is threatened by their present organisation which is inefficient and in danger of catastrophic collapse. Recognising that a complete lack of government (control) is anarchy, a feature of some parts of major cities throughout the world where the "established authorities" have lost their power to maintain order in society, e.g. parts of New York, Beer shows that some constraint on behaviour is necessary to establish control. He suggests that this should be determined by the people themselves not the current holders and brokers of power. He proposes that cybernetics provides the science that can make this possible.

The concern with the collective well-being of mankind recurs throughout Beer's writing and is very clearly evident in his more contemporary work, an attempt to create a democratic management process. Beer's proposal here is to create a fully participative management structure, constructed in such a way that, "not only do we have a complete democracy within our organisational globe, ..., but we have a network that exhibits total closure."(74) Whilst this is not an appropriate place for a

full examination of the approach it demonstrates again Beer's belief in the democratic process and his determination to pursue that end such that the people may take control of their own present and future. Schecter[75 & 76] has reported working with this idea in a commercial organisation and July 1993 saw a world-wide experiment under the heading "World Syntegration" in which teams in a number of locations considered courses of action to change the operation of what Beer[77] has called "the triage pump", the organisation of the world which ensures that the rich get richer whilst the poor get poorer. The results of this work have not yet been formally reported although during a conversation with Beer in September 1993 he stated that it was not as successful as he had hoped.

5.6.3 Summary

Stafford Beer has been demonstrated to be a man who believes emphatically in the power of science, particularly cybernetics, to improve the lot of mankind as a whole and who demands that this science be employed by the people of the world in their own interest, rather than by the holders of power in theirs.

He is not content to philosophise about this topic, he is a man of action, and would I suspect, like Diogenes[72], "live in a tub" if this was demonstrably the best way to change the "World in Torment."

5.7 Conclusion

This chapter set out to review the substantial body of work which has already been published about the Viable System Model in order that its strengths and weaknesses could be revealed. Whilst at an epistemological level there remains ongoing and useful debate about the interpretation of the model, the "structuralist"

and "interpretive" views, at a more pragmatic level its general utility has been demonstrated in a wide variety of situations.

Jackson's[17] conclusions provide the base for this summary. The Viable System Model is a general model of any organisation, it deals with both vertical and horizontal interdependence and focuses attention on the sources and distribution of command and control. It provides a starting point for the design of information systems and recognises the interaction of an organisation with its environment. Finally it provides a useful diagnostic tool for improving organisational effectiveness and, addresses the matters of autonomy and democratic management. The weaknesses appear to be, the simplistic view that the Viable System Model provides from an interpretive perspective, that it underplays the purposeful role of individuals, that it may lead to autocratic abuse, and, that it is difficult to apply in practise. On this point it is worth reiterating that there cannot be general agreement about goals and purposes - an agreement which is fundamental to the use of the model - without a participative management approach to create that agreement, "it is clear that the model depends for its full and satisfactory operation on a democratic milieu."[17 PG 120]

The next chapter will review the whole of the first part of this thesis, summarise the cases for and against the Viable System Model as a more adequate representation of organisation for contemporary managers and indicate the areas of interest that will be pursued through the practical research.

Chapter Six

The Viable System Model;
A More Adequate Representation? : the Cases for and against

This chapter concludes the first part of this thesis by briefly reviewing the work so far, and presenting a summary critique of the Viable System Model. The chapter finishes by highlighting those matters that will be pursued through the various case studies.

6.1 Introduction

Chapter One highlighted the increasing complexity and dynamism faced by contemporary managers from factors both internal and external to their organisations. Flawed and ill-timed responses to this complexity were suggested to be arising from the use of inadequate management tools. Chapter Two, highlighting the limitations of all models in general, critically examined the dominant, or mainstream, organisational models, i.e. the classical, human relations and systems views of organisations, and revealed their strengths and weaknesses. The Viable System Model was then suggested as being "a more adequate model of organisation for contemporary managers." Chapter Three introduced the science of Cybernetics and related the cybernetic model to the dominant models, demonstrating its potential utility. Jackson's(17) distinction between "management cybernetics" and "organisational cybernetics", represented by the Viable System Model, was then elaborated. Chapters Four and Five were dedicated to explaining and reviewing the Viable System Model, the first examining its conception, construction and methodology the second reviewing the major applications, developments and criticisms.

6.2 The Dominant Models Revisited

The "machine" model of organisation, derived from the work of Taylor, Fayol, Weber etc. relies on three main assumptions that are considered to be flawed in the contemporary context. These assumptions are, that an organisation can be treated as isolated from its environment, that improvement in performance of a part will necessarily improve the whole, and, that the organisation must be studied from the perspective of its management. Whilst the machine view is useful in stable environments and for straightforward tasks using unthinking human parts, it is considered to inhibit adaptation and dehumanise people. Its strengths rest in the systematic analysis of tasks and the derivation of order from chaos. Its weaknesses are that, it ignores the environment and the interdependence of parts, does not recognise the need for adaptation, and, does not consider the "purpose" of an organisation. It fosters control through hierarchy. The machine model only deals with formal or real organisations and although it may help to diagnose faults it does not offer assistance with cures.

The organic model of organisation, representing the Human Relations and Systems view derives from the work of Mayo, Maslow, Herzberg etc. for its human relations aspects, and Barnard, Selznick and von Bertalanffy for the systems view.

The Human Relations view has strength in its recognition of the contribution and needs of the individual but it has a number of weaknesses. Firstly, many applications assume that human needs must be fulfilled through work despite warnings from Herzberg et al. to the contrary. Secondly, it does not allow that the needs and goals of the organisation may sometimes necessarily override those of individuals within it. Finally it does not help with the specific tasks of designing and structuring organisations to deal with tasks which are becoming increasingly complex.

The systems model does have the strength of recognising the environment of the organisation as being of importance, however, it also has weaknesses. It appears to accept survival as being the primary aim of the organisation, seeming to ignore achievement of goals and achievement oriented activity. Secondly, it is considered to "reify" the organisation, perhaps ignoring the rational activity of human actors. Thirdly, there exists no adequate method of measuring "success" and although interdependence is stressed, effective measurement of this is difficult. Finally, the solutions offered for problems are untested and vague, emphasising maintenance and inhibiting radical change, possibly to the detriment of survival.

6.3 The Cases for and against the Viable System Model

The Viable System Model portrays any organisation as a system which, through cybernetic processes, is capable of survival. An organisation designed in accordance with the cybernetic criteria is expected to learn and adapt in a changing environment with which it is in dynamic interaction.

Unlike the machine model, the Viable System Model is systemic, recognising both the environment and the interrelationships of the parts of a system. The environmental interaction enables the system to both influence, and be influenced by, its environment. It enables purposes to be imputed to a system by its observer(s), such that a number of different perspectives on the existence and description of the system and of its situation may be considered. Like the machine model, it enables the systematic derivation of order from chaos, but, it does this in a way that holds the total organisation in view whilst changes are considered, and, it enables learning and adaptation by the system.

With the Human Relations model, unlike the general systems and machine views, the Viable System Model enables the consideration of the purposeful role of

individuals, although it is considered that this may be underplayed. It also offers mechanisms by which the system can recognise when human needs are being met, whatever those needs may be. It is also argued that it may be used autocratically, although this point is disputed, e.g. Beer, Jackson.

Unlike the other models, it recognises that survival is a primary aim, but it also encourages dynamic goal seeking behaviour in pursuit of survival. The Viable System Model offers precise help with diagnosis of and rectification of organisational faults, provides help with the design and structure of organisations whilst enabling measurement of success. Its theoretical generality is supported by a widening variety of practical applications in both large and small systems. The principal remaining arguments against the model are the difficulty of applying it in practice, and its "simplistic" view of organisations from an "interpretive" perspective.

The Viable System Model, at this stage of the thesis, can be considered to be demonstrably "more adequate" than the dominant models of organisation for contemporary managers.

6.4 Research Proposed and Empirical Investigations

The general utility of the Viable System Model has been demonstrated and its superiority to the dominant models considered. There nonetheless remains further research to be undertaken.

The second part of this thesis will consist of a number of case studies that will be used to address several areas of interest. First, if the Viable System Model is more adequate, then it must be made available to Managers. Aimed at "science in the service of the people"(69) work will be undertaken where the concepts and ideas of the model are expressed in the language of the stakeholders in the

systems examined, rather than that of cybernetics, to improve accessibility. This follows Beer's admonition that when information crosses system boundaries, in this case from the "cybernetician system" to the "case study subject systems" it must be expressed in the language of the receiving system if communication is to take place. Second, the diagrammatic conventions and the numbered sub-systems will also be experimented with to avoid the interpretation of the model as an alternative hierarchy.

The efficiency and effectiveness of self-regulating systems will be examined in terms of the impact of a reorganisation using cybernetic principles. The quantity of purposeful rather than autopoietic work undertaken and its further impact on profitability will be assessed. The utility of the Viable Systems Model as a process of managing rather than as an abstract tool will be addressed. Its contribution when used in consulting practice in organisations, not as a tool but as a way of exploring, understanding and developing the "models-in-use" of the participants in the system will be considered. The investigations will show how the Viable System Model can help to deal with the softer issues of organisation, such as culture, values, beliefs. The way in which the Senior Management of an organisation can be thought of, and operate, as an Operations Research group, using their diverse skills to holistically address the needs of the organisation will be examined.

The impact of these investigations on the perceived utility of the model and the implications for methodology, diagrammatic presentation and accessibility will be considered.

6.5 Conclusion

This chapter has reviewed the first part of this thesis, restating and summarising the principal arguments. The strengths and weaknesses of the dominant

approaches to organisation and problem solving have been reviewed and then compared to those of the Viable System Model. The principal weaknesses of the Viable System Model have been highlighted and in response to these a research programme of empirical investigations outlined in summary form. The next Chapter will provide an introduction to the various case studies, elaborating the purpose and objectives of each.

Chapter Seven

Empirical Investigations

This chapter introduces each of the case studies undertaken, setting out the case background and extent of involvement. The objectives and constraints of the studies are revealed.

7.1 Introduction

Part One of this thesis established the need for a more adequate model of organisation and suggested that Beer's Viable System Model might offer this. The background of cybernetic theory was revealed and the substantial prior work undertaken with the model reviewed.

This second part of the thesis, consists of a series of case studies undertaken to explore the further development of the Viable System Model, demonstrating its use and in particular exploring how it can be made more accessible to contemporary managers. Each study has been undertaken either in the case of FinCo as part of salaried employment, or as remunerated consultancy.

A constraint on the content of all of the studies except for the last is the need to preserve commercial confidentiality. To satisfy this need the names of the organisations concerned have been changed and only abstracts of financial information included. These are considered sufficient to fulfil the needs of this work and demonstrate the points made although inevitably it would be richer if further information could be provided.

7.2 Carco

This study utilises the Viable System Model in a family owned and financially failing retail car dealership. The original involvement was at the request of the then Sales Director who, on behalf of the Managing Director, was investigating the potential for a relocation of the dealership to a new site. Help was sought with designing a layout for a new building. In order to achieve this it was necessary to discover how the organisation operated and how a new design of building could best support that operation. The preliminary investigation revealed that, whilst a relocation would resolve some of the difficulties being faced by the organisation, there were a significant number of issues that would not be addressed in this way. At the commencement of the study the business had not operated at a profit for eight years. It was facing increasing competition with which it appeared ill equipped to deal.

The major issues facing the organisation were its consistent failure to finance itself adequately through retained earnings, continued operation being funded by way of an increasing bank overdraft. Staffing and management problems were evident in terms of both numbers and quality and the organisation had apparently ineffective or non-existent information systems and performance standards. Communication, co-ordination and control were inadequate. These problems were compounded by the lack of a common sense of purpose amongst the staff and the failure to undertake any proper form of planning. Decisions were made on the basis of short-term local expediency rather than long-term overall benefit.

These internal problems were further aggravated by an increasingly competitive and difficult business environment. Sales were falling throughout the industry and a rise was being seen in the number and strength of local competitors. Withdrawal of support by the Franchisors and by the Company's Bankers if improvement was not seen were further considerations.

Collectively, the management and staff of Carco had little or no management training other than from "in-house" courses run by the Franchisor. This presented some difficulty in utilising a sophisticated contemporary approach such as the Viable System Model. It was considered that, notwithstanding this difficulty, the Viable System Model could offer significant assistance in addressing the problem situation. If the model is to be considered more adequate for contemporary managers it must have utility in a situation such as this. The work undertaken used the ideas and concepts of the model but these were largely expressed in the language of the organisation being studied rather than in cybernetic terms. The impact of this on the success of the project undertaken will be considered as part of Chapter Eight in which the study is more fully reported. The study also examines the impact of the concept of purposeful behaviour in achieving focused activity aimed at achieving organisational goals.

7.3 FinCo

This study implicitly utilised the Viable System Model in the substantial redesign of a relatively autonomous part of a major finance company. This work was aimed at changing its structure from an internal control focus to an external market focus. The writer was Project Manager for this undertaking, charged with the design and implementation of the new approach. The use of the Viable System Model was necessarily implicit since the organisation was unfamiliar with systems approaches in general and an explicit use would have been unacceptable to the Senior Management outside the area of concern.

The project sought to use the Viable System Model to provide a set of guiding principles for the redesign of the organisation whilst utilising the Senior Management team of the Strategic Business Unit concerned as an Operations Research Group. This enabled the bringing together of their models of the problem situation in an open forum in which problems could be explored and

proposals for improvement made. The scientific and cybernetic expertise was provided by myself.

This application emphasises the importance of the purposeful behaviour of the participants in a situation. It may not be viewed as a pure and technically perfect application of the model but it aims to show how the model may be used and its ideas and concepts taken into mainstream management thinking. Particularly important in this case are the attempt to develop a self-regulating unit, composed of a large number of individuals, working together but without any control hierarchy. The issues of purposeful and autopoietic behaviour will be examined along with aspects of efficiency and effectiveness arising from the study.

7.4 Cakes

This study shows the explicit use of the Viable System Model in a cake factory. A functionally autonomous unit of a public company in the food manufacturing sector, the factory had been milked as a cash cow by its owners for a number of years, whilst operating under a threat of closure. The management of the factory were instructed that "output at all costs" was their objective, and, in pursuit of this many of the conventional approaches to operating the factory had been suspended. The organisation was suffering from a high absence rate, poor morale, ineffective organisation and a lack of control, co-ordination and planning. An abundance of management and supervisory positions were in evidence although in some cases Supervisors were unable to speak the same language as their subordinates or superiors in the hierarchy.

This application explores the use of the model in improving organisational effectiveness and looks at ways in which the essential non-purposeful, supporting activities of the organisation can be focused to avoid pathological autopoietic

behaviour. The use of the model to assist in exploring, understanding and describing management roles is also discussed.

7.5 Teaching Viability

This final study reports the use of the Viable System Model for structuring a Singapore MBA class studying the Viable System Model. MBA students have previously been schooled in the more traditional approaches to management, and, the cultural norms of Singapore society see the Manager in a hierarchically superior position, commanding and controlling the subordinates in a relatively autocratic manner; questioning and criticism are not encouraged. Similarly, in the classroom setting the normal behaviour is that the Lecturer lectures and the students record the given wisdom.

When teaching a subject such as Organisation Design, and, proposing the Viable System Model as the most useful approach the traditional non-participative teaching method seems inadequate. A wholly different approach was taken. This required full and active involvement from the students in the processes of learning and classroom management.

The study reports the use of the Viable System Model for structuring the classroom, and its implications for the roles of both students and lecturer. Some experimentation with the diagrammatic representation of the model is also reviewed. A modelling of the writers "self" is undertaken in this study as a means of highlighting the importance of understanding the roles in an organisation.

7.6 Conclusion

This chapter has introduced the four case studies that will be reported in the next two chapters, highlighting the major issues to be addressed through each. The major aim is to reveal ways in which the ideas and concepts underpinning the Viable System Model can be made more accessible to contemporary managers. The various applications are expected to reveal implications for the methodology, descriptive language and diagrammatic representation of the Viable System Model.

Chapter Eight

Passing on a Family Business, or a Family Business Passing on?

This chapter reports an application of the Viable System Model to a family owned motor vehicle retailer in the UK. An earlier and shorter version of this paper was published in Systems Practice, Vol. 5, No. 5, pp 543-560, Plenum, 1992 (Reference 35). The chapter covers the diagnosis and reconstruction of the business and highlights the importance of purposeful behaviour and the use of language appropriate to the system being studied. Account is taken of developments since the original paper was written in 1990.

8.1 Introduction

This chapter reports an application of the Viable System Model to a retail car dealership. The project has been ongoing for over three years having mainly been conducted in an informal, people-oriented manner, matching the management style of the organisation itself. The skills of the management, the size of the organisation, and the financial constraints under which it operated determined that this would not be a technology driven project. Similarly, few formal reports have been produced; it has normally been possible to develop and implement changes as part of the daily process of managing the business, seeking and obtaining the support of the management and staff. The process of intervention has been one of learning and experimentation, with new ideas and approaches being encouraged and implemented with varying degrees of success. A feature of the project throughout has been the impact of the personality of the

Chairman/Managing Director on the decision processes of the organisation and the success of the changes made.

8.2 Background to the Application

8.2.1 The Initial Situation

Carco, in business since 1903 initially as a bicycle shop, is now a family-owned car dealership, managed by the third generation, with a turnover of approximately £5m sterling. The Company employed fifty people at the outset of the intervention, many of whom were long-serving. Carco offers a full range of services to the motoring public including new and used vehicle sales, servicing, body repairs, parts sales, car hire and forecourt services.

The project began when the Directors realised that the continued existence of the business depended upon the development and implementation of change to overcome an eight year record of unprofitable trading. Substantial reduction was required to the ever increasing bank overdraft secured by the freehold site which was the Company's principal asset. The Directors considered that the value of the site would be sufficient if realised to eradicate the overdraft and re-establish the business in new premises operating with a lower cost base (arising from a reduction in interest charges, staffing levels etc.). They initially sought help with drafting the layout of the proposed new premises.

An initial intervention showed that Carco was comprised of seven highly differentiated but closely interdependent business areas. Control of these areas required a careful balance of central direction and autonomy to ensure operational freedom coupled with organisational cohesion. The Directors needed a composite view of the organisation to enable rapid decision making in a deteriorating

situation and to ensure that changes in one area could be evaluated in the light of the likely impact on others. This initial intervention showed that Carco was in a serious condition and suggested that, while a realisation of the value of the freehold land might alleviate the immediate concern with financial viability, a number of other symptoms present would, if not cured, lead to a recurrence of the financial difficulties.

Carco was suffering from poor leadership, inadequate financial control and a lack of recognised and enforceable performance standards. There was tacit conflict between some members of the management team which inhibited already inadequate communication and meant that limits of authority were badly defined, managers referring queries to the superior most likely to grant their wishes rather than to their formal superior. The lack of cohesion at the Senior Management level meant that there were no policies in use, each decision was being made in isolation, reinforcing the conflicts.

The accounting system of Carco was inadequate, incompatible computer systems leading to many tasks being undertaken twice, for example, a parts sale being entered into one system for stock control purposes and to another for accounting purposes. The business operated without an adequate business plan or any budgets. Management accounting information was almost two months out of date. This meant that management effort was concentrated on managing the past, they had little information about the present and virtually none about the future, not least what they wished it to be!

There was almost no Senior Management involvement at the level of implementation. Senior Managers seemed to be unaware of implementation activities, and had no useful knowledge of the relevance and benefit of them to the poorly defined objectives of the organisation. Job descriptions and guidelines were either out of date or, in many instances, non-existent.

Carco was considered to have two principal assets which could provide its salvation. Firstly, the previously mentioned freehold site which was considered at the outset to have sufficient value, if sold, to both eradicate the overdraft and fund the development of a new site. Secondly a high reputation in the locality with a loyal customer base.

This section has introduced the initial situation at Carco, the subject of the case study.

8.2.2 The Retail Motor Industry

The motor industry in general forms a significant element of the manufacturing base of most industrialised nations. World-wide manufacturing capacity exceeds market demand and both competition, at the retail level, and collaboration at the development and manufacturing level between manufacturers are very strong. UK vehicle manufacturing has experienced a period of significant decline since the 1960s although this has been reversed during the late 1980s and early 90s by the development of manufacturing plants by three Japanese manufacturers, Nissan at Sunderland, now a significant exporter, Toyota at Derby and Honda at Swindon. These plants represent attempts by the manufacturers to consolidate their products in the UK market, reducing the cost of manufacture by taking advantage of lower labour costs and increased automation. This will also enable penetration of the larger European market by the companies becoming manufacturers within the European Community boundaries. While the UK based manufacturers have revitalised their manufacturing to become more competitive with the Japanese products, competition has been further increased by the larger number of manufacturers, the newly industrialised nations in the Asia-Pacific Region being a significant part of this, for example Proton Cars from Malaysia, Kia from Korea.

These new products have been introduced to a consumer market which after significant growth in the 1980s experienced a downturn during the UK economic recession which reached nearly 30% but is now undergoing a slow recovery. The market peaked at 2.1 million registrations in 1989, falling to less than 1.5 million in 1991 and is expected to increase to approximately 1.7 million in 1993[78 & 79]. The nature of the market is also changing in response to other factors such as the open European market, an increasingly hostile tax situation with respect to company owned vehicles and rising environmental concerns which have led to a significant upsurge in the volume of diesel engined and fuel-efficient cars being sold.

The dealership structure, which drives the retail motor industry in the United Kingdom, has evolved over the last century. Its roots were in direct selling by manufacturers but it is now a combination of solus garages, multi-outlet dealerships, and multi-franchise, multi-outlet dealerships. The majority of dealerships operate under franchise agreements with manufacturers although some chains are exclusively owned by vehicle importers and another, Nissan, has recently been bought in by the manufacturer.

Dealerships vary in size from major Public Limited Companies owning chains of outlets to family-owned single-outlet businesses such as Carco. The majority of dealerships are operated on a franchise basis, an arrangement where the franchisor grants to the franchisee the exclusive right to market its products in a particular territory subject to a number of conditions. These may include the establishment of operating guidelines, marketing and quality parameters, and sales/stock targets. The franchise normally includes a commitment by the franchisor to provide assistance with the management of the enterprise. It is currently the case that due to high competition, the fall in vehicle sales and poor management, many dealerships are not trading profitably and a number have gone out of business over the last three years, some voluntarily, some into receivership at the behest of their creditors.

While the particular marque with which we are concerned has traditionally held about 30% of its home market, it gives the appearance in the United Kingdom of being uncertain whether it wishes to be a participant in the volume or in the specialised sectors of the market. Although market share has grown from less than 4% to over 5% during the course of the project the Franchisor is continually demanding from its dealers both higher sales volume and greater retained profit, objectives which appear to be incompatible one with the other in the highly competitive market. This is exacerbated by strong competition between the Franchisor's dealers who regularly undercut each other in order to obtain additional volume. The Franchisors have undergone some organisational difficulties of their own recently which fall beyond the scope of this enquiry, but they are undergoing extensive reorganisation in an attempt to improve their performance, the impact of this on the Franchisees cannot at this time be assessed. It must suffice to say that the Franchisor has not asked the Franchisees (their customers) what they could do differently to support them. The Franchisors are reviewing their organisation in isolation from its environment; I am doubtful of a successful outcome.

Training and development of staff is not a priority area for most parts of the retail motor industry. Whilst on technical matters mechanics undertake an apprenticeship and must reach nationally recognised standards, in respect of the broader sales and management activities little or no training is undertaken. Franchisors run short courses for dealership staff covering particular skills and techniques but, the fragmented structure of the industry, the wide spread of ownership and the frequency of job changing means that there is no coherent personal development system. This poor quality of training is reflected in many aspects of the management of motor businesses, e.g. good salesmen are appointed as Sales Managers regardless of their suitability for the post, good mechanics become Foremen and After Sales Managers based upon their technical not their managerial ability. A consequence is the apparently poor

quality of management throughout the industry reflected in the number of failing dealerships and the reputation of the motor trade in general.

This section has introduced the Retail Motor Industry and the Franchisor as well as elaborating some of the threats and difficulties facing the industry in the 1990's.

8.2.3 Why Use the Viable System Model?

The Viable System Model appeared suitable for this case since it offered a rational framework for the creation of a composite view of a complex organisation. Following Flood & Jackson(5), the choice of the Viable System Model as a diagnostic tool is supported, in systems terms, by the complex and non-deterministic nature of the situation, the close interrelationship of the elements of the business and the requirement, initially unfulfilled, for effective communication.

This choice carried with it a degree of risk, the stakeholders in Carco had collectively little practical experience outside their own business and a narrow theoretical knowledge base in the field of management. They were unaware of systems thinking and cybernetics. A continuing feature of the work has been translation between conventional terms and those of the Viable System Model for those involved, this has been undertaken to ensure that communication between parties has been effective.

The Directors agreed at the outset that whilst the organisational hierarchy might alter (and indeed has), the operational elements of the business were clearly defined and, importantly for the use of the model, in principle capable of independent existence. These elements formed seven business units within one legal entity, Carco. The organisation had a perceived purpose of wishing to represent itself as a system for selling, maintaining, and hiring vehicles for profit.

A number of other purposes were contained within that envelope, as was revealed during the course of the study. These included an employment system, a family income system, and a system for generating private profit at the expense of Carco. These findings are of little surprise in a system serving human interests. Nevertheless, the systemic nature of the enterprise is evident - a number of elements, in relationship with each other and purporting to share a common purpose.

To continue, using the human metaphor employed by Beer, Carco could be described as suffering from "organisational Parkinson's disease" (a progressive chronic disorder of the central nervous system characterised by impaired co-ordination and tremor, Collins Dictionary, 1988), coupled with "corporate cataracts." Ashby's law, that "only variety can destroy variety," was clearly "more honoured in the breach than the observance," (Hamlet, I.iv.14); the explosion of unconstrained variety was tearing Carco apart. The organisation lacked viability.

The intention of the use of the Viable System Model was that this would assist the business to survive in an increasingly turbulent and competitive environment. It would help to develop effective control and monitoring mechanisms, serve to absorb variety, lead to reduced oscillation, encourage structured research and planning activity, and develop a sense of common purpose among the operational elements and the stakeholders. The financial viability of Carco has been seriously in doubt throughout the project, constraints have continued to be placed upon it by a financial and legal system that supports the closure of loss-making organisations.

This section has explained the choice of the Viable System Model as a diagnostic tool for the Carco project and detailed some of the constraints of the work.

8.3 “Organisation now, or bust."[25]

The system-in-focus of this study is Carco, a retail motor trader selling into the private and business sectors. The methodology is drawn from Beer[3] and Flood & Jackson[5].

8.3.1 System Identification

The first step in the diagnostic process is to determine the purpose to be pursued. The initial intervention, as already reported, revealed a number of purposes being pursued by Carco and its stakeholders:-

a system for selling, maintaining and hiring vehicles for profit

an employment system

a family income system

a system for generating private profit at the expense of Carco.

Beer [3 PG 99] suggests that, "the purpose of a system is what it does," and these were the things that Carco was doing. The first was not being fulfilled, since Carco had not made a profit for some years. The second was being achieved; Carco employed 50 people to do work that could have been accomplished by 35. The third purpose was how some of the family owners of Carco treated the business, many being provided with a fully expensed car and a petrol card while some other expenses were drawn from the business account.

The last purpose was derived from the behaviour of key individuals within Carco who treated the parts stock and services provided as resources to be utilised for

their own ends, a treatment which went unchecked since Carco had no effective metasystem. Discussion with the Senior Management of Carco led to an agreement that the last purpose was unacceptable and that the second and third should not be regarded as purposes of Carco but as forms of behaviour which might be acceptable to them if the first purpose could be achieved. It was made clear at that stage that operating a business in a highly competitive market with small gross profit margins could only be sustained in the long term by good sales performance and proper cost control; the probable alternative was liquidation.

The legal entity Carco was agreed with the Directors as being the system-in-focus and its purpose as being:-

> "To provide a comprehensive sales and support system to existing users of the franchisor's marque and through effective presentation of the franchisor's products to attract new customers, these activities generating profit for the shareholders of Carco."

Reorganisation of Carco to pursue this purpose then became the objective of the project.

Carco was seen as the system-in-focus (Recursion one) in a triple recursion with the franchisor at Recursion 0 and the operational elements of Carco forming Recursion 2. Each of these was perceived as capable of independent existence, i.e. a viable system in its own right. Figure 8.1 on the following page represents this triple recursion diagramatically.

An immediate difficulty encountered in the diagnosis was the selection of this triple recursion. The apparent organisational problems led the study to concentrate on Carco as the system in focus with its System One being the operational elements. A number of possibilities presented themselves for level 0. The situation could be

considered from a number of different perspectives. The family, as owners of Carco, could be considered, as could the local motor industry, the local economy and the dealer/marque structure.

Triple Recursion with the System-in-Focus at the Centre
(Adapted from Flood & Zambuni (25))

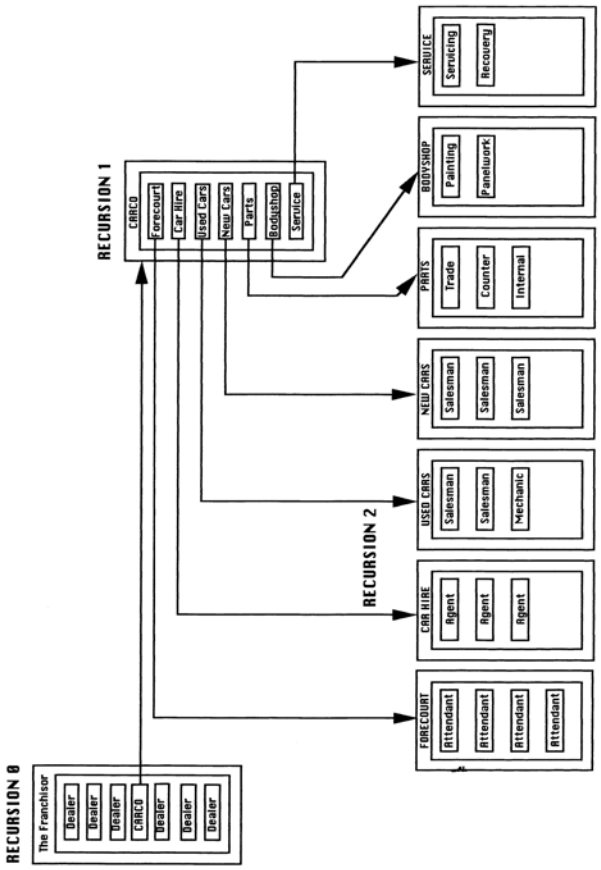

Figure 8.1

225

Triple Recursion with the System-in-Focus at the Centre

(Adapted from Flood & Zambuni (25))

Figure 8.1

Outline diagnoses were attempted with the different nominees. The local motor industry and the local economy were considered to be too remote and not

exercising a "management" influence on the business and came to be treated as environmental factors. The family was discounted, as whilst it had no doubt been a significant controlling influence on the business, this was seen to be unhealthy in terms of its impact and not a part of an effective control structure for the given purpose of Carco. The family has been treated as part of the environment at Recursion 0.

The dealer/marque structure was selected as the most useful modelling perspective. Carco is perceived by the public to share an identity with the Franchisor and the franchise agreement determines Carco to have relinquished some of its autonomy in return for belonging to that system. The Franchisor exercises a control function over Carco.

The selection of the Franchisor as Recursion 0 has caused some difficulties during the study, as will become apparent, but it has remained useful, and, as Beer so helpfully puts it(3 PG 2):

> "you are not determining absolute facts: you are establishing a set of conventions." "A model is neither true nor false: it is more or less useful."

The System One divisions of Recursion 0 are the dealers; each one is a separate and autonomous legal entity but is bound to the franchisor by a contractual arrangement. Each of these System One elements promotes the sale of all of the Franchisors products within an exclusive territory.

The purpose to be pursued has been agreed with Carco but cannot be agreed with the Franchisor. They, as already indicated, have problems of their own which have precluded any substantial dialogue with them although this has improved during the course of the project. It had been hoped to undertake a further modelling at the

level of the Franchisor but this has not proved possible due to their internal difficulties and the requirement for confidentiality of other Dealers.

Recursion One is Carco. It has embedded in it its own System One divisions, these are, New Sales, Used Sales, Parts, Service, Bodyshop, Forecourt and Car Hire. The focus of this study is recursive levels 1 & 2.

8.3.2 System Diagnosis: Reorganisation of Carco

Carco is considered to be potentially viable from both the financial and organisational perspectives; that is, it could in principle be separated from the Franchisor and maintain its existence. The organisation of Carco at recursion One will now be described. Figure 8.2 represents the initial situation diagramatically.

Carco: The Initial Situation

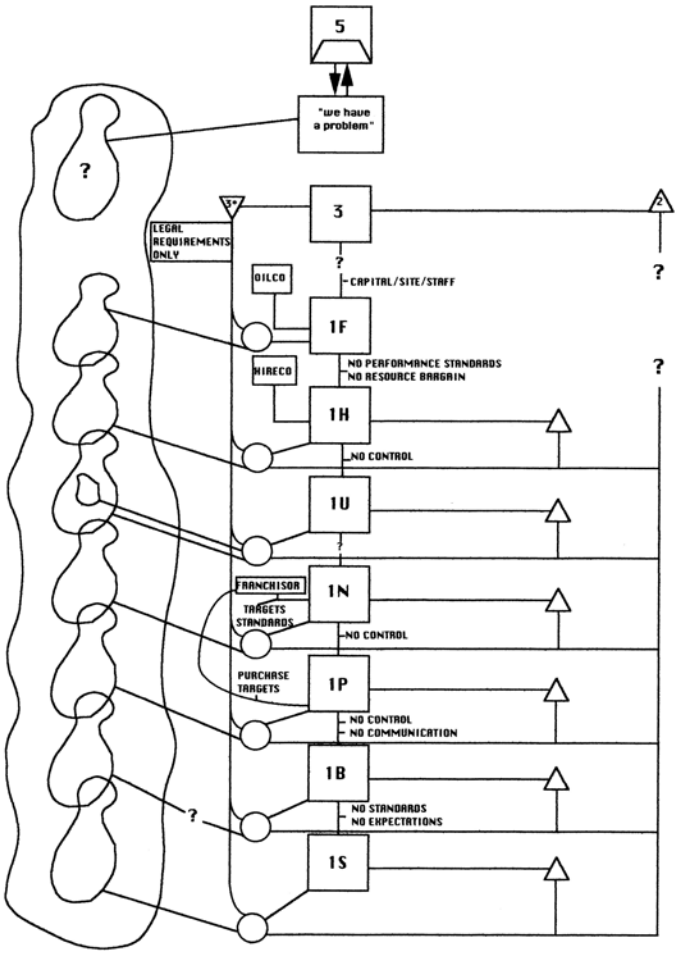

Figure 8.2

228

Carco The Initial Situation

Figure 8.2

8.3.2.1 System One

Carco, by virtue of historical accident rather than design, was already divided into seven potentially viable elements.

1F is the Forecourt operation. Its capital, staff and site are provided by Carco and yet, whilst it is subject to constraints from the metasystem has been attempting to achieve full autonomy, representing a threat to the cohesion of Carco. Performance standards for volume of petrol sales and operating standards covering pricing, presentation, corporate image and all other areas are determined by Oilco through a franchise agreement. Oilco provides a separate accounting system, incompatible with that of Carco, leading to further administrative work in the metasystem. The manager of 1F does not seek to communicate with the rest of Carco, and Oilco is attempting to take over the System 3 role of "inside and now" management and System 2 co-ordination of 1F as part of its, differently defined System. The metasystem of Carco only belatedly realised this but had taken no action to resolve matters.

1H is a car hire operation. Again, it was a part of Carco but appeared to be trying to break away. Direct control was taken by Hireco, a further Franchisor, representing another threat to Carco's cohesion. All operating standards, performance levels and so on were again determined by Hireco. The metasystem of Carco had again been bypassed and this had led to a situation whereby 1H was unprofitable. Changes in the growing local environment, including new competition, had not been responded to and a return to a profitable situation could not be envisaged without substantial capital investment. This could not be supported by Carco. The first decision arising from the project was to close this operation in view of its lack of profitability and the inability of Carco to fund the relaunch necessary to achieve a turnaround in performance.

Care was taken in this respect to avoid inventing a machine for eating Carco (like Beer's machine for "eating the railways"(1 PP 14-16). It was considered that although there would be some small loss of business to Carco as a result of closing this operation it would not significantly affect the rest of the business. This subsequently proved to be the case, the closure having no noticeable impact on the other aspects.

1U, a used car sales operation, has similarly been closed down since the commencement of the project. The operation had been established to become the first local quality used car outlet and in its early years was successful. The metasystem of Carco however granted this unit almost complete autonomy amounting to an abdication of its position and exercised no effective control over behaviour. The staff were found to be undertaking private transactions, profiting personally to the detriment of Carco. The financial constraints under which Carco was operating meant that this operation, which required significant capital to maintain, became insupportable in an environment when sales were slow and profit margins small.

The operation was closed down, at which time it was discovered that a number of items had been stolen and were not recoverable. The closure of this unit did have a noticeable impact on the rest of the business of Carco, it had provided a useful outlet for vehicles traded in to the New Sales unit which subsequently had to undertake this activity for itself. The unit had had a distinct and separate image in the local marketplace, trading in its own name but under the umbrella of Carco's reputation, the message sent to the market by its closure was that Carco was in financial difficulties, an active used car sales operation being seen as a fundamental requirement for any motor retailer. The decision to close this unit down was made in the belief that failure to do so would definitely lead to receivership for the whole business whereas by closing it there was some hope of survival.

This description shows that whilst System Four initially functioned well in recognising an opportunity it subsequently failed to notice changes in the market. Systems 3 & 2 failed to monitor behaviour and establish performance standards.

1N represents the key purpose of Carco, the sale of the Franchisor's vehicles. The Sales Manager and his staff were unsure of their reporting lines within Carco and worked towards targets and standards determined by the Franchisor. These were, as with Oilco & Hireco, imposed directly at Recursion 2, rather than negotiated through Recursion 1, the metasystem was again bypassed. The sales levels imposed and stock levels demanded by the Franchisor were insufficient to ensure the financial viability of Carco and had been progressively relaxed as Carco had consistently failed to achieve targets set, leading to a downward spiral in performance. Carco, with no effective metasystem, had no means of recognising this problem, nor any means of controlling the behaviour of this element, as there were no adequate reward or sanction mechanisms in place. It was in any event unlikely that the higher levels of sales necessary to sustain Carco could be achieved as this would have meant obtaining a market share of twice the then average for the Franchise.

In addition to the foregoing failings, there was no mechanism in place for tracking the profitability of transactions, management accounting information was 2 months old, and stock of products was subject to unpredictable constraints from the manufacturer (a higher recursive level and beyond the scope of this work). Collectively these problems represent System 3 failure to control, System 4 failure to plan, and System 2 failure to monitor and co-ordinate behaviour.

1P is the Parts Department, selling to both internal and external customers. When the franchise agreement was signed between Carco and the Franchisor in 1973, a major factor in the decision to take on the particular franchise was that Carco was to be a parts distribution centre supplying a large area of the United Kingdom on behalf of the Franchisor. It was this profit opportunity that was expected to make

the change from the previous higher volume franchise worthwhile. Shortly after its inception, the Franchisor changed its policy and established its own national distribution centres taking business back from the Franchisees, this had the effect of reducing the value of the franchise to Carco but no consideration was given to a further change being made. A franchise change incurs considerable capital cost.

At the outset of the intervention, the Parts department was operating with no internal budget, aiming to hit purchasing targets established by the Franchisor, achievement of which led to personal reward for the Manager. No heed was paid to the volume of sales. This had led to a position of significant overstocking and what can only be described as "silly" ordering. For example, the Manager purchased 150 glass sunroofs to be sold into the After Sales market, these were bought at the beginning of winter and when most vehicle ranges were being factory equipped with such items. The personal rewards for the individual were determining his buying behaviour.

A computerised stock control system was inadequately used - of 78 menu options, the staff knew how to use two, one to enter new stock and one to issue sold items. This was contributing to the overstocking situation with many items being effectively unsaleable. Stock turnover achieved of 2.5 times compared unfavourably with an industry standard of 4 - 6 times. Failure of systems 2, 3 & 4 was again indicated here.

1B is the Bodyshop, undertaking all kinds of body repairs for both internal and external customers. While on the basis of historical information the element appeared to be marginally profitable it was operated without the benefit of any budget. There was no form of measurement in place to assess workshop utilisation, faith being placed in the ability of the Manager to maximise use. Similarly, no quality assessment was undertaken, System 3 becoming aware of the operation only when a customer complaint was received. An example of poor communication in this element is the occasion when two similar vehicles were scheduled for work

on the same day, one for a body repair, the other for installation of a sunroof. The vehicle requiring the body repair was fitted with a sunroof whilst the other vehicle was returned to its owner with the comment "no damage found!" This element again demonstrated the failure of System 3 in its role and a lack of communication with System 4 (the quality assessment) which would enable the future development of this activity.

1S is the Service Department, preparing and servicing vehicles for both retail and commercial customers. No performance standards were in existence, there was no budget and workshop utilisation was dependent upon the judgement of the service receptionist. Further evidence of the failure of Systems 3 & 4 is drawn from the expensive training of a "technical expert" whose newly acquired skills had been ignored rather than exploited.

Reorganisation of System 1 commenced with an examination of the need for local control of each element and an attempted clarification of the reporting lines and job requirements for the individuals concerned. This was seen as a first step in effective absorption of variety at the operational level, it also ensured that every manager knew to whom he was to report. This was accompanied by a reduction in the numbers of staff employed, certain positions being recognised as superfluous to requirements. The initial reduction in numbers concentrated on those who it had been demonstrated were profiting privately from their employment, the decisions being "forced" upon the metasystem.

IH, the car hire operation was closed down; it was unprofitable and was absorbing time, capital and staff resources which could be better used in other parts of Carco. 1U, the separate used car operation was also closed, its marginal profitability and the difficulty of supporting its capital requirements in a slow market meant that it could not be sustained despite its value to the whole business. The management of this element, having been granted almost total autonomy through the inertia of the metasystem had determined a purpose for the element which was totally different

from that of Carco as a whole. It was apparently being operated for the personal profit of its staff while trading on the capital and reputation of Carco. This reputation was beginning to suffer from the staff's behaviour and the apparent difficulty of recovering a strong trading position on very limited resources made closure inevitable. The staff were made redundant.

The remaining operational elements became involved in the development and negotiation of budgets for both financial performance and activity volumes. The focus of attention was on activity volumes since it was perceived that the financial performance was determined by this, and it was considered that budgets in terms of vehicles or workshop hours sold expressed the needs of Carco in the language of the sub-system. This was seen as a means of improving communication and commitment at that level, these individuals not being trained in financial analysis. Subsequent reports and returns had to undergo a translation between System One and Three such that they were expressed to each System in its own language.

This process reduced previously uninhibited variety by providing negotiated targets and helping to clarify the objectives of the organisation. It also made clear to System One for the first time the financial and organisational difficulties being faced by Carco and enabled an understanding to be achieved of the unstable and critical nature of the organisations ailments. In addition to the operating budgets, certain procedural issues were addressed, including a capital expenditure approval system, capital expenditure had previously gone unchecked. Training plans and budgets for the development of management staff were also prepared.

Operationally, parts purchasing was brought under control, orders for stock parts being kept to a minimum in an effort to reduce stock levels. Training was instigated (at Recursion 2) in the proper use of the stock control system to minimise future errors and a "sell-back" arrangement was reached with the franchisor in respect of certain stock items. This represented approximately 30% of the stock by value. The agreement required that Carco reinvest the funds released in current stock. This

was to be put into fast moving lines and an objective was set to reduce the stock level by 30% over time, aiming towards a stock value of less than £100k and stock turnover of around 8 times. These actions further served to reduce variety at System One by providing clear rules and performance expectations and provided the metasystem with a facility for monitoring System One behaviour. Direct control by the Franchisor and Oilco at System One also ceased due to the increased activity by the metasystem and internal changes at the Franchisor. This will be further dealt with in the examination of Systems Three, Four and Five.

Further changes have included an overall increase in the level of communication between System One and the metasystem, serving to attenuate variety of the operational elements and amplify the variety of the metasystem. Formally, this communication is represented by meetings between the senior management and the System One managers. This is supported by regular informal discussions on a daily basis, the activity of "managing by walking about."(81) The greater visibility and approachability of the senior management through these tactics, while not directly measurable in impact, are certainly beneficial.

The negotiation of budgets also led to an examination of the practice of discounting, which is prevalent throughout the motor industry. It would prove impossible for a sole dealer to cease this practice altogether; market capacity is such that many prospective purchasers would simply go elsewhere. However, it is possible to recognise that no profit is made on certain discounting arrangements. These have been reviewed, and wherever possible changes made to ensure profitable trading, or, at least, immediate recognition of a non-profit transaction.

It was also proposed that the incompatible computer systems be replaced with a single integrated system to deal with all the information needs of Carco. It was envisaged that this would be developed on a platform of Personal Computers, enabling both local control of information by the System One elements and cost effective information sharing and transmission to other parts of the organisation.

This would have had immediate benefits in reducing the number of people employed by enabling many tasks to be completed once rather than twice or more. Further benefits would have been obtained through the eradication of many duplicate, manual records. Brought together in a shared database the information could be used for more effective marketing activity such as prospecting for service and repeat sales business. The original multiple manual records are difficult to maintain and, consequently, frequently out of date. Recent examples of the failure of the system include a client receiving two service reminders in the same post and another receiving a reminder to service a vehicle which he had sold to Carco some six months previously. The proposal would have directly saved Carco £10k in its first year, being the difference in direct cost between the leasing and maintenance of the original systems and that of the replacement. There would have been a cost of training and installation. The Directors of Carco shelved the proposal as the initial investment could not be made available and the medium to long term future of the organisation was so uncertain.

These changes were implemented over a fairly short period of time. It was to be the function of the metasystem, not the consultant, to monitor performance and behaviour, rewarding and sanctioning as appropriate.

8.3.2.2 System Two

System Two exists as a service to System One, providing organisational cohesion by monitoring behaviour and damping oscillation caused by the varying demands of the operational elements. To achieve this objective, monitoring must be established and standards of behaviour determined against which actual behaviour can be measured. While some monitoring had been ongoing in Carco, it will be apparent that with an ineffective metasystem and the independent actions of the System One elements there were few matters available to System Two.

Such standards as did exist were purely qualitative, such as, "We must strive to achieve a high quality of service." Few measurable standards were determined internally, and, where they did exist they had been established by the Franchisor and Oilco without taking account of the particular circumstances of Carco. They were extrasystemic rules, not System Two policies. This tended to make them either unachievable or unacceptable, usually for financial reasons.

The creation of budgets, performance standards and monitoring mechanisms it was hoped would enable System Two to perform more effectively in the future. For this to be achieved, changes needed to be made in the management accounting system to enable it to operate nearer to a real time basis. It is, after all, of little benefit to know that an unacceptable disturbance occurred two months ago.

A monitoring return (Appendix i) was introduced which served two purposes. First, since it was completed individually by the System One Managers, it focused their attention on the weekly performance of their operational units. This enabled them to respond much more quickly to emergent individual problems such as poor productivity in the workshop. They were also able to quickly assess the impact of any operational decisions and to calculate, using known fixed costs and the information contained in the return the approximate profitability and overall performance of the area for the preceding week. Consideration was given to generating this information on a daily basis but it was considered that, in the nature of the enterprise, a weekly assessment was sufficient. Carco is not operating in a production environment at this level of recursion and the managers believed that reacting to a single day change could lead to higher levels of oscillation, a days assessment being likely to misinform.

Second, it provided information to the metasystem which could be used to measure patterns of performance over time without explicit use of the command channel. The return was regarded as being "for information only," not a formal return to which a response would be made since performance expectations were to be

monitored over longer periods. It was intended that the return would enable the detection of serious perturbations at the time of occurrence enabling the future development of a system for predicting emergent problems.

Apart from the absence of adequate performance and financial monitoring procedures, which played a significant part in the complacent attitude of the metasystem and the poor performance of the Company, other "softer" standards aspired to by the metasystem were not being communicated. They were not effectively shared with System One. Evidence of this is seen in the abuses, particularly in relation to financial matters, which have already been recorded. Whilst much of this might have been detectable through competent financial monitoring, much of the impact could have been achieved through other standards being utilised. Effective checking of prior employment records and references, formal employment contracts, and communication of the needs and expectations of the Company would have helped. Firm and visible responses to theft would have helped even further.

The improvements in communication between the metasystem and System One were seen as enhancing this situation, monitoring being through System Two on an informal basis. It was intended that "Good Behaviour" should be enforced through the creation of policies to encourage it rather than through the use of "laws" and effective detection of faults. System One elements were to be encouraged to recognise that non-viable behaviour threatened the continued existence of the entire system-in-focus and that it was in their own long term interests to conform to the "societary" norms of Carco and encourage others to do likewise.

8.3.2.3 System Three*

This system, a part of System Three, audits the System One operational elements to amplify System Three knowledge of System One activity. This closes the gap

between the total variety arriving at System One and that absorbed by System One and the other communication channels.

Carco had no System Three* function other than those legally required activities such as the annual stocktaking and financial audits. Even these were carried out later than should have been the case, rendering financial statements inaccurate if not totally misleading. Normal applications of System Three* activity such as quality audits, internal audits of financial information, personnel reviews and analysis of operating performance did not happen. My intervention in the Company was the first attempt to institute this type of audit.

Carco was persuaded to introduce reviews of this type using its own staff resources and calling on external expertise where necessary. As part of the project a review was undertaken of the System One Managers, comparing their abilities and expectations with those of the allocated task. Similar work was undertaken with the information systems and accounting systems to determine how well they were used, how well they matched the requirements of the organisation and what changes were seen as necessary or desirable by those who had to use them. These various internal and external reviews were seen as supporting the effective implementation of the other procedures. System Three cannot determine what it wants or needs to investigate until it has some current and relevant information concerning the activities of System One. Similarly, its interaction with System Four must be informed by this knowledge, if it has none then it cannot engage properly in that dialogue. This information can be provided through an effective System Three*.

8.3.2.4 System Three

System Three, the "inside and now" management of Carco was evidently ineffective. The catalogue of symptoms displayed by System One show that Carco

was not under control. At the outset of the study, few effective rules or agreements had been determined with System One which, in consequence, could not be held accountable for its behaviour.

System Three of Carco operated an inadequate accounting system, this leading to employment of additional staff and completion of tasks in duplicate. There was no clarity in the command structure. This stemmed in part from the lack of clearly defined and understood roles amongst the Senior Management and from their failure to control Carco.

A particular example of the problem in this system was the inability of the participants to resolve conflicts arising from mutual participation in other systems. Father and son working together as codirectors were unable to separate their working and personal relationships, which arguably existed, for this study, in different systems. While this particular problem was later resolved by the resignation of the son from Carco this generated a further problem. Disregarding advice not to take the course of action, the Chairman/Managing Director, in conjunction with the non-executive Director, appointed the Finance Director and Sales Manager as "joint General Managers," they could not choose between them. This served to obfuscate the roles in System Three and led to renewed confusion amongst the System One managers as to who was responsible for what. The Sales Manager was the first to have active roles in both Systems One and Three but was again unable to separate them such that he knew in which one he was performing at any given time. He tended to act always in the interest of his operational element rather than in the interest of the system as a whole.

Attempts continued to clarify the roles within System Three by a process of education and ongoing debate and the problems were largely resolved. One further member of this management team was required to resign. He was a prime cause of the previous subversion of the purpose of Carco. The individual concerned worked in an autocratic manner, managing by fear and was believed to be responsible for

the embezzlement of Company funds. Nothing was proven against him, but he resigned when challenged.

Despite these difficulties the functioning of System Three has been improving, benefiting from the implementation of negotiated budgets and targets. Resource bargains are now agreed with System One management. This simplifies subsequent decision making through prior definition of standards and policies against which new options can be judged and as a result of which, many questions are no longer asked. System One managers perceive that their autonomy has increased. Budgets have been critically examined following an exploration of past financial data which served to highlight loss-making areas and those which were absorbing cash. Resource bargaining has drawn upon this information and attention has been focused on loss-making and low profit activities in an attempt to boost income and reduce costs where possible.

One illustrative example is the operation of the parts sales to other traders, most of which business arose when Carco was a parts centre for the Franchisor. Carco buys parts from the Franchisor with variable discounts which depend upon the part supplied, its frequency of use and whether it is a unique or patternable part. For example, a light bulb is a patternable part, obtainable through a large number of non-franchise outlets, it is thus made available at a large discount in order that volumes can be maintained. A transmission shaft is unique to the manufacturer and will consequently be supplied at a much smaller discount. Around 30% of Carco's parts sales are to non-franchised outlets and Carco allows them a large proportion of the discount which it itself receives. For example, a part discounted to Carco at 22% might be discounted to a trader at 19%, leaving Carco with a gross margin of 3%. This margin is reduced by overheads of Carco, such as delivery costs, so the net apparent margin to Carco might be say 1.5%. While marginal this at least appears to be a transaction for profit. However, analysis undertaken showed that, in addition to the discount given, most traders were being extended credit on all purchases of 60 days. At then current interest rates payable of 15% (1.25% per

month) the notional profit of 1.5% was being eradicated. Trade parts debtors represented about 14% of the then borrowings of Carco, costing £30k at contemporary interest rates. An improvement through both a reduction in discounts and a tightening of credit has been achieved. This example helped to illustrate to the Directors and Managers of Carco the need for a systemic view to be taken of the enterprise and the need for the individual decisions at System One to be assessed for impact on both other areas and the business as a whole.

Further improvements in the accounting and internal intelligence functions of Carco were still needed. Investment in a new computer system was still required and many tasks were still being carried out in duplicate. A decision was made to replace those functions and it was intended to implement this when funding permitted. Meanwhile manual systems have been improved to reduce repetition of tasks and the support staffs have been reduced significantly in number.

The value of systematic gathering of information on performance has been recognised and changes implemented. Again, this is based on manual systems and meetings. These meetings now involve the genuine exchange of information rather than "noise" and are seen to have benefits for both System One and Three participants. During the course of the project the System One managers have been progressively integrated into the System Three functions, further enhancing purposeful communication and holistic understanding of the business.

A major use of the information gathered is advice to System Four, the intelligence function, of the current states of the operations. This information was not previously being passed because none was being gathered and there was no apparent System Four to which to pass it!

8.3.2.5 System Four

The function of System Four is to enable adaptation of the organisation by recognising changes in the external environment, engaging in dialogue with System Three regarding changes perceived as necessary and generating survival plans. This should take place on a continuing basis. At the outset of the study, Carco had no intelligence function.

While recognising that "we cannot carry on like this," virtually all activity was concerned with the day to day running of the business and not with the future, although as stated some consideration had been given to a relocation. The Company's Bankers were becoming increasingly concerned about their lending exposure as property values were falling and Carco's freehold site was the security for their borrowing. An absolute limit was placed on the overdraft facility. This led to the decision that all or some of Carco's assets would have to be sold to reduce borrowings and increase the chances of survival.

A number of options were identified, each of which, in conjunction with the operational changes already started, could be expected to lead to financial viability for Carco. These options are detailed below.

Sale of the forecourt operation.

> Whilst this would have raised sufficient funds to reduce the overdraft, it would also have reduced the Bank's security by an identical amount to the funds raised, leaving Carco in an arguably worse position. Since the sale would place operational limitations on the remaining business, and reduce its overall market value this option was discounted.

Sale of approximately one third of the site.

This was then used for vehicle storage, and involved no short term relocation. An agreement was reached with a property developer to pursue this option which was expected to raise £330k immediately with a further £200k on completion and sale of a building. Since the land was only valued at the original sum this represented an attractive option as it would have generated cash with which Carco could have revitalised its business. During the delays in obtaining detail planning consent the value of the land has fallen and the previously active property market has moved into recession. At the time of writing, recovery is under way and the prospects for a sale are much better.

Sale of half the site.

This would have involved major property work and the acquisition of additional land elsewhere for part of the business. The cost of building work and the time delay involved seemed to make this unacceptable.

A full relocation of the business to a cheaper site.

This was seen as almost inevitable in the longer term in order to ensure the full financial viability of Carco. The local planning authority also wished to see a redevelopment of the site which is on the main access route to the town centre.

Negotiations have continued over the course of the project to complete one of these courses of action.

Meanwhile, other System Four activities have been addressed. These include training and succession planning, and a review of ownership of Carco. A search for additional sources of income has been commenced and ways of increasing market penetration for the Franchisor's products in the local market are being sought.

Since Carco is a small organisation, 35 employees at the time of writing, System One managers have been brought into the Corporate level (Recursion One) intelligence function. This promotes effective exchange of information among Systems One, Three and Four. System One managers, as well as acting at System Four Recursion Two, looking after the interests of their individual operations, are undertaking surveys of the Corporate environment, seeking to define opportunities for new business, to identify threats and suggest responses.

This represents a significant change in activity for most individuals. They are technically well trained but have little or no theoretical or practical experience of management or planning at the Corporate level. Hitherto, their main management function has consisted of planning the day's work and supervising the staff on the basis of those short term plans. The involvement of many new people helps to ensure effective communication between the operational elements and the metasystem but may also be seen as a precursor to changes then being considered at System Five.

8.3.2.6 System Five

System Five of Carco is comprised of the Board of Directors, being the Chairman/Managing Director, the Finance Director and a non-executive Director. At the outset of the study this board did not fulfil an effective System Five role of arbitrating between the conflicting Systems Three and Four demands for adaptation

and change. It acted more in a System Three capacity, monitoring the ongoing financial results although failing to make any adequate response to them.

A company with a wide spread of shareholder control derives a power of adaptation from this. If the shareholders are unhappy with the performance of the Company they can elect new Directors and fire poorly performing ones. This was not the case with Carco which is a private company, the Chairman/MD holding the majority (68%) of the shareholder voting rights. The true intrasystemic power over the fate of the company rests with him. The votes of the other Directors, and the opinions of non-enfranchised shareholders have no effective value.

This individual was granted the position by his father, who had been similarly placed by his father, the founder. The current incumbent had no significant power in the Company until his father retired, and he would have preferred to pursue a different career. As the only son, he felt obliged to continue in the business as requested. He is in effect System Five. I have come to think of this individual as a variety mirror, rather than Beer's "variety sponge."(3 PG 125) The problems and challenges emerging from the system are reflected back into it, generating further confusion and chaos: an organisational greenhouse effect. This has been a major factor in Carco's decline over the last ten years. The situation has changed to some degree over the course of the study, principally in response to pressure from external agencies, e.g. the Bankers and Franchisors.

The Chairman/MD had at this stage expressed his desire to retire from the business when it was financially, and honourably, possible. A change of ownership then became a prospect as none of his children wished to have an active involvement. Consideration was then given to a further reconstruction of Carco. This would have split the Company into trading and property divisions, the trading company would then have been sold to the employees and the property leased to that new enterprise after the sale of one third for the redevelopment outlined above. This option proved to be unachievable financially. The employees were unable to

raise sufficient capital from their own resources and they were unable to demonstrate to potential backers their ability to competently manage the business. The important point to be addressed is that the employees would then have been formally represented at System Five in a new system whose purposes they not only shared, through self-interest, but would be able to define and redefine. This would have been reminiscent of Beer and Allende's proposed System Five in Chile.

Such an approach carries with it its own problems, both of politics and of effective management. The number of truly successful commercial organisations owned and run by "non-professional" employees is limited, although Walker(44) has elaborated one situation in which it was achieved. It was recognised that, while a "technology transfer" taking the skills to the people would have been a proper way forward, during the interim period the team would have needed to "buy-in" the requisite skills. This does not denigrate the abilities and potential of the employees, it simply recognises that each of us employs others to carry out tasks which are beyond our own range of competencies. The reorganisation of Carco is shown diagramatically in figure 8.3 on the following page. Appendix ii gives summarised information demonstrating the improvement in financial performance between the financial years 1990-91 and 1991-92. Figures for 1992-93 are not yet available.

8.4 Further developments

When it became apparent that this employee/management buy out scheme would not proceed, consideration was given to other courses of action. Meanwhile the financial situation continued to deteriorate, reductions in staffing and other costs being outweighed by the increasing interest burden and a failure to consistently achieve better profit performance at the operations level. The Chairman/MD continued to avoid the hard decisions which faced the business. For example it had become evident that the Sales Manager for the New Car Sales element (1N) was unable to raise the performance of his area despite considerable assistance from

the Senior Management and representatives of the Franchisor. It was recognised that he needed to be replaced and this was agreed at a meeting of the Board in September 1992. Action was finally taken in March 1993 by which time the situation had deteriorated further, and, this action was taken at the suggestion of the Sales Manager who indicated his willingness to leave. Other similar decisions were made but no action was taken.

Minimal Diagram for the Reorganisation of Carco

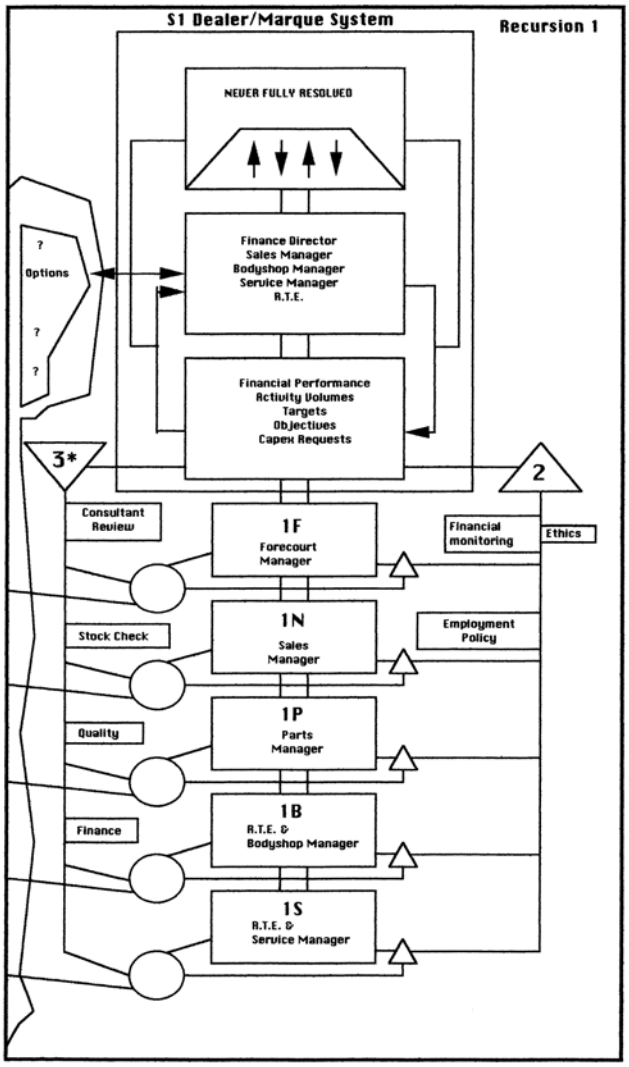

Figure 8.3

252

Minimal Diagram for the Reorganisation of Carco

Figure 8.3

It was found during October 1992 that a forward profit deal could be struck with Oilco in respect of the forecourt. This, taken together with the sale of part of the site would generate sufficient funds to reduce bank borrowing to a level supportable by the business. It would also have allowed for some refurbishment of the premises and restocking of Used cars which were by this time in strong demand but, for Carco, in short supply due to lack of funding. During previous months used car stocks had been regularly liquidated to generate funding to meet the ongoing costs of the business. This forward profit deal initially seemed to offer a new way ahead for the recovery of the business, however the Chairman/MD continued to vacillate, and before a formal agreement could be made with Oilco two further events occurred.

The Banker's to Carco, concerned about the security of their loan asked for a revaluation of the Company premises. This revealed that the value had fallen to a level not far above that of the funds lent, and the Bank indicated that a substantial repayment was required within six months together with formal proposals for repayment of the balance of the overdraft. This in itself was enough to force decisions on System Five. The Chairman was, and remains, personally liable to the Bankers for any debts of the Company to them.

At the same time a formal meeting was held between the Franchisor and Carco. It was made clear during this meeting that substantial improvement in vehicle sales performance and the condition of the premises needed to be seen in the short term otherwise the franchise would be withdrawn. While not a formal notice of withdrawal of the franchise this was a clear indication of the route that would be followed.

This meeting was followed by numerous informal discussions between the Franchisor and Carco seeking clarification of their requirements and expectations.

Whilst during the previous period direct intervention by the Franchiser and Oilco at System One had been inhibited although not completely stopped this was an attempt to integrate the Franchisors representatives into at least Systems Three and Four of Carco. This was to some extent successful in that a reasonable degree of co-operation was achieved but did not alter the fundamental position of the Franchisor's Director. On reflection this course of action could have been taken much earlier but was prevented by the degree of antipathy between the two parties, Carco's System Five considering the Franchisor to be to some degree responsible for the company's difficulties, the Director of the Franchisor considering that System Five of Carco was unfit for his role.

The Director subsequently made it clear to me as Consultant to Carco that a change of Senior Management was required at Carco if the Franchisor were to continue its support. This message was conveyed, not without imposing some strain on the Consultant/Client relationship, to System Five.

A meeting was subsequently held involving the Directors of Carco and myself, the conclusion was reached that with the demand from the Bank for substantial repayment and the pressure from the Franchisor for a change of control, a sale of all or part of the share capital of Carco was necessary. An accountants investigation revealed that a cash injection of at least £250k was necessary in order for Carco to trade through the summer of 1993, funding which was not available from the existing enfranchised shareholders. Further discussions with the Bank led to the imposition of a cut off date of 30th June 1993 by which time a deal for the sale of the business, or the injection of new funds, had to be completed. Meanwhile the Bank suspended application of interest charges on the overdraft.

The requirements faced changed the objectives of the project. While the original purpose, the reorganisation of Carco to achieve its purpose remained in order to preserve the employment of the 35 staff, it also became necessary to focus on the personal financial well being of the Chairman/MD. He had given personal

guarantees to the Bank and the Franchisor to cover Carco's liabilities, guarantees which he would find it difficult to meet from his personal resources. If these were crystallised and called upon then he would face the possibility of personal bankruptcy.

Great reluctance on the part of the Chairman/MD was overcome and advertisements were placed in the trade press and other papers seeking an outright sale of Carco or alternatively an equity partner. A possible buyer was eventually found and a sale completed on the following terms:-

> Carco retains the development site together with a related proportion of the borrowing with a view to completion of the development. This site has a profit potential for Carco of up to £200k. This profit is dependent upon the final terms of the development agreement and arrangements for renting out the building.
>
> A subsidiary company has been formed and the purchaser has acquired the share capital of this subsidiary for £1. It also takes on the majority of the assets, debts and liabilities of the new Company, including that part of the overdraft not related to the development site.
>
> The present Chairman/MD of Carco receives a small pension from the new owners and all existing employees have been transferred.

This deal was agreed and largely completed during July of 1993. At the time of writing (September 1993) final details of the transaction are still outstanding. An agreement, albeit reluctant on the part of Carco was struck very rapidly between Carco and the new owners, however the external agencies have exhibited

behaviour which, while it may be legally necessary for the protection of their client's interests, is certainly not supportive or enabling of the transaction.

8.5 Summary

This case study has highlighted the need for a composite view to be taken of an organisation and shown how the Viable System Model can enable this. The Retail Motor Industry was introduced and the original situation and reorganisation of Carco outlined, showing the gradual emergence of order from chaos.

While the final outcome, which is yet to be fully resolved, is not that which was hoped for, the continued existence of Carco seems assured, at least for the time being. The original purposeful system has, in cell-like fashion, divided into two systems, one fulfilling the original purpose under new ownership, and, a second one fulfilling a wholly new purpose related to property development and management. The system will survive.

The Viable System Model has proved invaluable throughout this process in a number of respects. It has enabled each part of the analysis to be undertaken with the whole organisation in view. Conclusions have been reached only after rigorously taking account of the requirements of, and impact on, other areas of the business. The need for information to be effectively generated and shared has been established and welcomed by most of the participants at all organisational levels. It has enabled the creation of a more effective metasystem, albeit this has been less than perfect in operation.

The operation of the metasystem, in particular System Five, has underlined the impact of the purposefulness (or lack of it) of individuals within an organisation. It has demonstrated that however useful a model may be, unless individuals are committed to making proper use of the information generated and are prepared to

make decisions the outcome will be less than might be hoped for. Perhaps, concentration on improving the effectiveness of the metasystem, particularly System Five, should have been the first priority of the project and this might have led to a different final outcome. The practicality of consulting is that the consultant must work, at least at first, in the areas where he is invited to go, and which are perceived by the problem owners to be the focus of the issues to be resolved.

As a practising consultant it has been my perception that the use of the Viable System Model aims to achieve some of the same results as some of the more traditional approaches to management, a reduction in chaos through variety engineering. Whilst more traditional approaches would have focused on the performance of the parts without looking at the whole; the Viable System Model concentrates on the whole and may accept sub-optimal performance of some of the parts to achieve a defined overall objective. The two perhaps should be seen as complementary, rather than alternative, the reductionist analytical techniques being seen as supportive to the holistic view through a more detailed examination of particular parts of the operation, e.g. procedures.

8.6 Conclusion

This chapter has reported an extensive application of the Viable System Model to a retail motor trader. The outcome is perhaps a little unusual but the case demonstrates the utility of the Viable System Model in a crisis situation.

The next chapter will report further experiences with the model.

Chapter Nine

Guiding Freedom, Developing Organisation & Action Learning

This chapter reports three separate studies using the Viable System Model. The first involves the reorganisation of a complete region of a Financial Institution, the second a diagnosis and redesign of a Cake Factory and the third shows how the Viable System Model may be both taught and used as a pedagogical device.

9.1 Introduction

This chapter contains three discrete applications of the Viable System Model. Each was undertaken with the objective of developing understanding of the model. They explore how it could be made accessible to contemporary managers in substitution for the dominant "machine" and "human relations" views. The names of the companies concerned have been changed in the first two studies to preserve confidentiality and safeguard commercially sensitive information.

9.2 FinCo

9.2.1 Introduction

The original report for this case study amounts to over 120,000 words in nine volumes comprising in the first volume, an overview of the whole project, being a statement of the purpose and philosophy underpinning the project and a review of the lessons learnt. The second and subsequent volumes contain reports of the seven pilot implementations undertaken and the appendices which propose

outline job descriptions, model structures etc. This is necessarily a very brief version of that report.

The project was undertaken in a cybernetic fashion in as much as, while the broad objectives were explicit at the outset, the implementation was undertaken in a heuristic manner, changes being agreed and implemented with subsequent monitoring and modification where necessary. This enabled continuous movement towards the "goal" of being a financial institution able to meet the needs of its stakeholders. The somewhat radical approach meant that the plan was written after the event to provide a future "platform for change" rather than before the event as a procedures manual. The writer was the sole management scientist involved in the project, the bulk of the work being undertaken by those affected and in their language rather than that of cybernetics. The decision to undertake the project in this way was joint between myself and the Chief Manager as it was considered that an explicit modelling in cybernetic terms from the outset would mainly serve to alienate those whose contribution was most vital. Over the course of the project cybernetic terms were introduced as a means of exploring and explaining some of the ideas, and throughout, the words Implementation, Co-ordination, Control, Planning and Policy, were used instead of sub-system numbers.

This approach was unique in an organisation that was accustomed to developing new structures, procedures etc. in a Head Office department and "passing them down" to Office level for implementation. Whilst some consultation always took place in these circumstances, in the event of a dispute or disagreement the view of "the Centre" would prevail. In this particular case, we had the freedom to design the organisation that the participants wanted within the constraint of fulfilling the purposes of the higher recursive levels.

9.2.2 Background

FinCo is a broadly based financial institution with world-wide coverage but a predominant reliance on the UK market. It has been in existence for around four hundred years in a variety of forms and through a number of changes of ownership, mergers, acquisitions etc.

FinCo operated in the UK on a basis of three Regional offices headed by General Managers with responsibility for all business activity in a geographical area. Each Region was further broken down into smaller regions under the control of an Assistant General Manager with a number of Area Managers each responsible to him for between 10 and 30 offices which operated semi-autonomously but within "Head Office" guidelines. Each Office had its own management team and internal hierarchy. The whole organisation operated in a hierarchical and bureaucratic manner, adherence to the rules, doing the "right thing," being more important than doing things right. Figure 9.1 on the following page is an outline of the original organisation chart.

Lending decisions in excess of office manager authority were referred to a Lending Department within the Regional Office with sanction either being granted by personnel within that unit or by the General Manager or Assistant General Manager responsible for the office. This Lending Department also carried out a number of monitoring and audit procedures on behalf of the Regional Office officials. The Regional Office also had support functions responsible for Personnel, Property and other administrative matters.

The corporate plan for FinCo in the late 1980's called for a review of the operation of the UK office network. It was considered that the organisation was failing to compete adequately with its major rivals in the market and that this threatened long-term profitability. It was perceived that the organisation needed to improve its

performance in a number of key areas if it was to continue to be considered a major participant in its markets.

Following an extended study of competitors' practices; customers and non-customers opinions; staff views and reviews of the current organisational structure, the desired service improvements were seen as being achievable through:-

a faster more professional response to customer queries

pro-active development of relationships

improved understanding of customer's business

accessibility, availability and continuity of staffing.

Finco: Original Organisation Chart

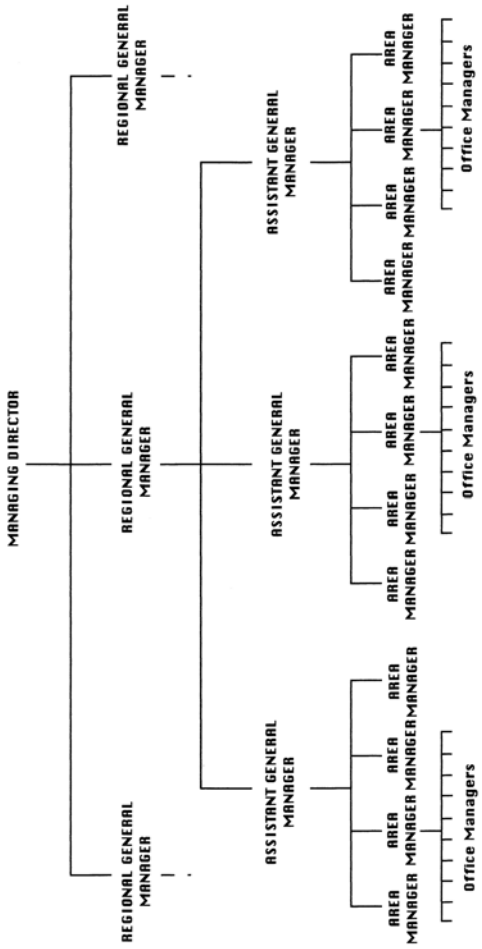

Figure 9.1

264

Finco: Original Organisation Chart

Figure 9.1

The original Regional structure was seen as inhibiting many of these factors, in particular with regard to staff issues and response times to customers. The decision was made by the Board of Directors to restructure the organisation, reducing the number of layers of management in an attempt to both speed up decision processes and to gain greater economies available from the grant of additional local autonomy.

The revised organisation chart is shown as Figure 9.2 on the next page, and this change was implemented simultaneously with the changes which will be outlined in the following case study. The basic changes were the abolition of the positions of Assistant General Managers and Area Managers, all branches being grouped under Chief Managers. They were responsible for between 12 and 30 branches in a particular area, this was seen to flatten the structure, shortening communication lines and speeding decisions. Although no account was taken initially of the need to devolve greater decision authority to the new Chief Managers, authority for some administrative issues, such as Personnel and Property, was delegated to them.

The outline proposals at the Corporate level were developed in conjunction with a number of officers from various disciplines within the organisation and when submitted to the board carried their support - they were not the proposals of a group of isolated management scientists. The Viable System Model was used implicitly to support the development of the proposals and provided the underlying logic to the work.

The initial Corporate level changes having been outlined the case study concentrates on the organisation of the newly created Groups and the changes in organisation design, procedures and systems that were developed to support them. The methodology used was drawn from Beer(3) as crystallised by Flood & Jackson(5).

Finco: Revised Organisation Chart

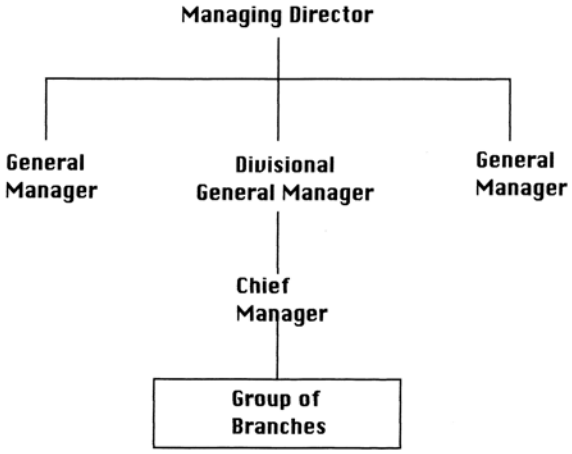

Figure 9.2

266

Finco: Revised Organisation Chart

Figure 9.2

9.2.3 System Identification

The "purpose" to be pursued in this case was given by FinCo at the Corporate level and was:-

> "to maximise business growth of FinCo throughout the Group in a secure manner."

Scope was not available within the terms of the project to debate the validity or legitimacy of purposes such as growth and profit. The nature of the enterprise and the legal and commercial environment within which it operates entailed these features.

The relevant system (Recursion 1) for achieving the purpose was "the Group" since it was this that the project had been established to study and redesign as necessary. The contained systems (Recursion 2) were initially the thirteen offices comprising the Group and the containing system (Recursion 0) was the Region. Figure 9.3 on the previous page shows this diagramatically.

The identification of the Group as the "system-in-focus" at Recursion 1 was an enforced decision, the selection of the offices as contained systems at Recursion 2 was seen as reflecting the traditional approach of the organisation. It was agreed with the Senior Management team that an initial modelling using that approach would form the basis for discussion of any inhibitions to the achievement of the Group objectives of profitable and secure business growth.

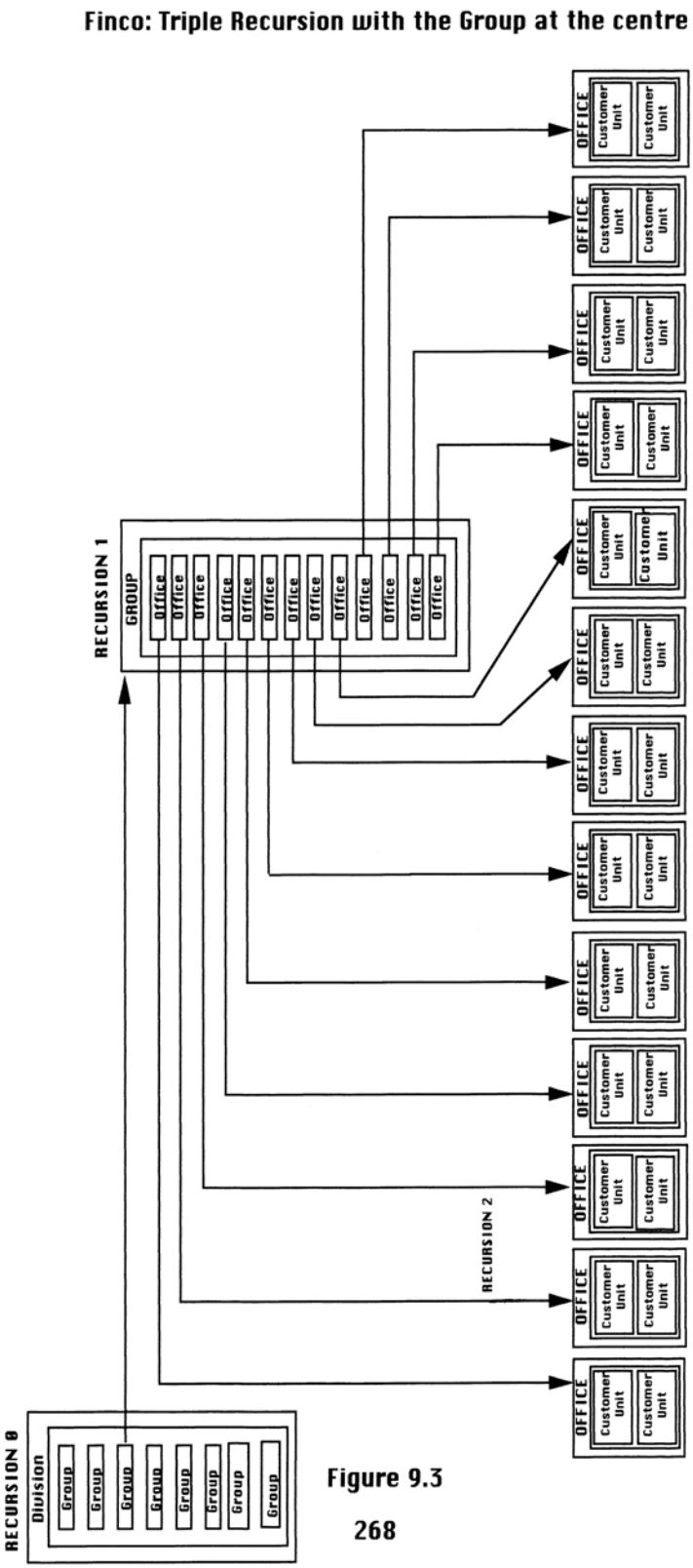

Finco: Triple Recursion with the Group at the centre

Figure 9.3

9.2.4 System Diagnosis

9.2.4.1 System One

Whilst each of the thirteen offices was studied in turn as a System One element of the system-in-focus, the essentially common organisation enables the presentation of only one element for the study. The environment of the System One elements consisted of geographical areas surrounding the offices ranging from the central commercial district of a major city to suburban and rural areas. The principal environmental factors with which it was decided the organisation needed to deal were competitors, customers (who were at the time divided alphabetically at Recursion 2) and non-customers. The operations carried out by the offices were the provision of the full range of financial services products, and each was under a Local Manager, an officer of FinCo.

Under the then existing arrangements, local managers had a limited lending discretion, varying from £5k to £250K, and were charged with growing the assets (lending) of the business locally. Propositions for lending sums in excess of local discretion were referred to the Regional General Manager's office. Local Managers had negligible input to many decisions affecting their office, such as the level and quality of staffing, premises appearance, and range of products to be offered. While they would be "punished" for transgressions of FinCo's many rules and regulations, they were rewarded, other than in basic salary which related to their seniority, in an annual bonus which was derived from the total performance of FinCo as a whole rather from the specific performance of the local office.

Local managers were held accountable for the performance of their office but the only measurements taken were of quality of lending and adherence to standard procedures and centrally imposed budgets. These were reviewed on a biennial basis. During the intervening period lending positions which had become out of line

with expectations were identified by the Regional General Manager's office and referred to the Local Manager for comment.

A number of significant problems were identified by the Local Managers during the process of studying System One. Firstly a gap was shown between the skills and operational capabilities of the Managers and Staff of the local offices and the needs of the customers. The customers were demanding greater "variety" from the office than it could provide. Secondly, the wide differences in demands between the customers, from simple personal finance issues to complex problems of corporate finance were not recognised by the organisation of the system, nor matched by the variety generating capability at most offices. Thirdly, the organisation was exclusively internally and control focused in its operating procedures, recognising customers as a "necessary evil" to its continued existence, rather than the driving force behind its survival.

9.2.4.2 System Two

There were a number of possible sources of conflict/oscillation existing between the various elements. The geographical areas had considerable overlap such that more than one Local Manager was competing for the business of the same potential customers. Different lending discretions and managerial abilities led to conflicts where one Local Manager could be more aggressive in Business Development and obtain business which another manager regarded as "rightfully his." Staff resources were allocated by the Regional Office without any specific local knowledge or information provided so that there were frequently too many staff in one office with too few in another, or a poor mix of skills.

No formal co-ordinating mechanisms were in place to alleviate these difficulties although local managers would, if both were in agreement, use their "squiggly" line connections to overcome them on an ad-hoc basis. Co-ordinating mechanisms did

exist for some other aspects such as the hours of opening, corporate image etc.. These were imparted from Head Office rather than being matters of local control and the organisation was unable to respond to local needs. The various Managers involved in this diagnosis were firmly of the opinion that no adequate System Two was in place and considered that such a system would be helpful to them in the fulfilment of their tasks.

9.2.4.3 System Three

The Group of offices was newly formed and as such had inherited a minimal System Three function from the previous corporate structure. The only constituent member of this System at the outset was the Chief Manager for the Group. He carried responsibility for the maintenance of discipline, the achievement of business targets and for the direct management of the largest of the local offices. This final duty absorbed the bulk of his time. In effect therefore there was no System Three in existence, control functions being either not exercised at all or brought into operation at times of crisis.

Authority was rarely exercised by the Chief Manager, great reliance being placed on the individual Local Managers to work within the corporate limitations. This was not an example of effective delegation but of abdication by the metasystem. Meaningful resource bargaining was non-existent, budgets being based on the previous year's performance plus allowances for inflation and growth. Little consideration was given to whether the resultant targets were either desirable or achievable. Bargaining for all other resources e.g. staff, premises, equipment was carried out on the same basis. While the Chief Manager carried overall responsibility for the performance of all of the parts of System One, his dual role focused his attention on the performance of his own office, with the others being neglected.

Audit enquiries through System Three* were minimal, investigations being carried out after a crisis had hit the System One element rather than as an ongoing part of the organisation of the system. This meant that System Three had little knowledge of the activities of System One. Whilst it might have been perceived that System One had considerable autonomy, in practice it was considered that System Three had abdicated its function. Thus System One was in a state of mild anarchy rather than freedom. System Three, when it operated was perceived to be autocratic.

9.2.4.4 System Four

There was minimal System Four activity, this relied on the work of the Chief Manager who was so engrossed in System One activity that this function was neglected. The Chief Manager was open to novelty but could rarely find time to "indulge myself in that way. There is work to be done."

9.2.4.5 System Five

While the Chief Manager was responsible for matters of Policy, no attention was paid to this aspect of his duties. There was in effect no System Five function.

9.2.4.6 Communication & Information Channels

It will be evident by now that communication and information distribution within this system were in a state of crisis. Communication channels were either non-existent, or "busy." Essential information, such as that needed for the completion of Head Office or Statutory returns was made available and the Management Accounting procedures provided monthly statements of the financial position in relation to the pre-set budgets. Little other information was routinely shared or called for and the

absence of an effective metasystem made it impossible for many difficulties to be resolved.

9.2.4.7 Commentary

FinCo had operated on a "machine" model, relying heavily on the bureaucratic approach to ensure internal control, with little attention paid to the need for adaptation and learning at the local level. Decisions taken at the centre were aimed at modifying the bureaucratic structure rather than at revolutionising the organisation. The Head Office assumed that the changes would be implemented with appropriate beneficial effect.

A number of major faults were identified in the foregoing diagnosis. The lack of an effective metasystem, poor co-ordination, a failure to match the organisation to its customers, no planning, ineffective communication and, considerable direct involvement from Recursion -1, the Head Office. The Group was described by one Manager as being "a loose lump of offices under the control of the Chief Manager." In terms of the Viable System Model the situation may be expressed as a lack of environmental awareness and interaction, ineffective System Two, weak System Three and non-existent Systems Four and Five.

The expectations of the Head Office from the restructuring of the higher levels of the organisation could not be fulfilled with the organisation as it then stood. It was agreed that some radical change was required. Figure 9.4 on the next page shows the original situation diagramatically.

Finco: Initial Situation

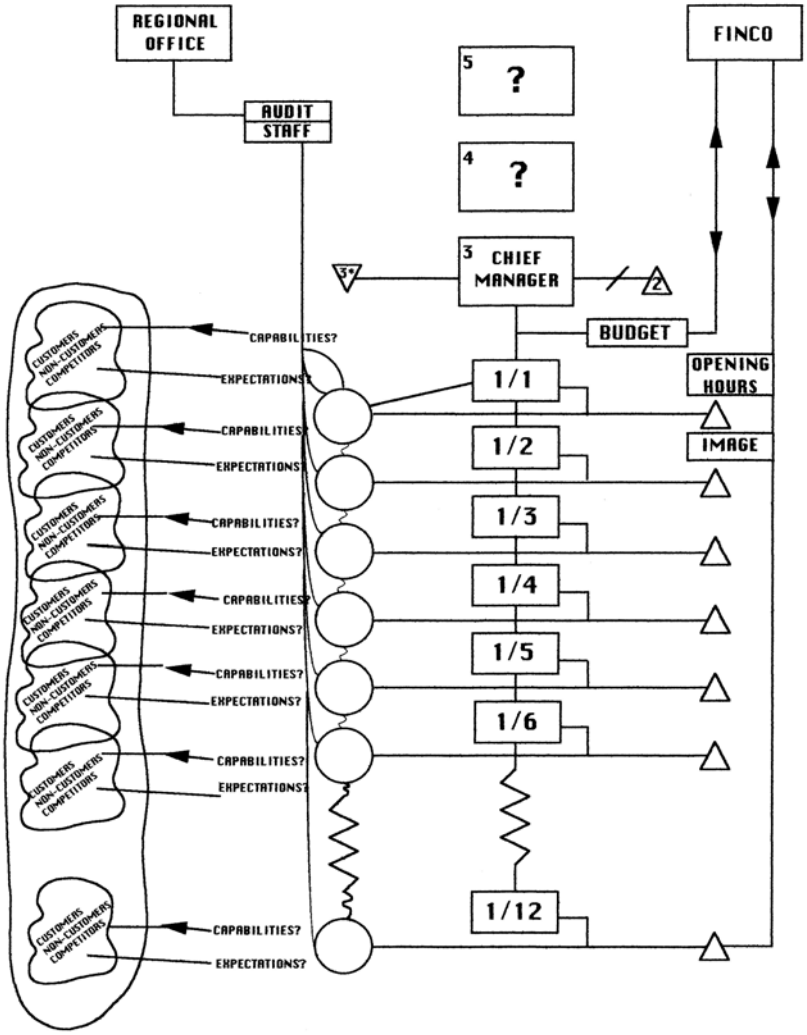

Figure 9.4

275

Finco: Initial Situation

Figure 9.4

The foregoing diagnosis was arrived at through a series of meetings and discussions held under a variety of circumstances, some of the most productive being "bull" sessions in pubs and restaurants where the managers felt most able to relax and speak out. The somewhat austere atmosphere of the offices tended to inhibit free speech.

All of the management staff were involved in the process, each making the contribution that he or she wished; inevitably, some were more vocal than others. During the process, as is to be expected in a large organisation the membership of the team changed due to promotions, retirements, etc. Each new member was introduced to the project and their views were always sought.

9.2.5 Redesign

The redesign of the organisation took place in much the same manner as the diagnosis. The faults with the system had been generally agreed and the project then focused on deriving a new organisation. The Management team was now beginning to function as an "Operations Research" team, bringing together all of their various skills to contribute to the project. Whilst they each shared a background in the financial services industry, their educational background varied from first degrees in Russian and other languages to Accountancy, Human Resource Management and Retailing as well as professional qualifications. Each member of the team brought some different and more or less explicit "model" of the world to the project. The writer acted as consultant, friend, cybernetician and guide to the process.

The first step was to question the basic assumptions about the structure of the system. It had always been considered that the "office" constituted the basic organisational unit and that the Group and Region to which it belonged simply exercised a hierarchical control function. It was agreed with the Management that in

order to design the organisation which was wanted, it might be useful to do this using the Group as the basic unit, with the Offices as constituent parts of a coherent whole. This formally acknowledged the Group as an organisational entity for the first time and moved the organisation away from the traditional recognition of its existence through the office network to recognising itself as a "distributed information system" in dynamic interaction with its customers.

9.2.5.1 System One

In redesigning System One, the first step was to consider how the Group could best use its resources to match the variety of its customers and potential customers. Reference was made here to prior market research. This had indicated, from a customer perspective, the mismatch between the skills available at each office and the needs of the customers. This led to a review of the way in which customer accounts were divided. It was decided that there were four principal categories of customer:

mass market personal, (those with very straightforward needs for safe custody of money, money transmission, small personal loans etc.),

specialist personal, (high income earners or high net worth customers seeking a more specialised and personal service),

small business, (sole traders and partnerships with relatively straightforward requirements),

large corporate (bigger businesses with more sophisticated and time consuming needs).

It was agreed that the System One implementation activity of the group should be considered in these four categories. The implications of this in organisational terms were great. The office ceased to be viewed as anything except an outlet for the services offered, it became an empty box through which could be provided appropriate services to match local customer expectations. As such each office no longer needed to be managed as an autonomous organisational unit. The business of the office was no longer treated as belonging to it but to the relevant market segments which had been identified.

There were to be only four System One elements instead of the previous thirteen. Each element would offer a specific range of services to a particular group of customers. This proposal was seen as enabling the organisation to more accurately match the variety of the operational elements to that of the customers in the newly discriminated environments. It enabled more effective use to be made of the core financial services skills as most senior staff were no longer required to "manage" an office but rather a portfolio of customers. It did however generate new problems of co-ordination and control.

Geographically, all offices continued to offer services to mass-market personal customers and to local small businesses. Specialist personal and medium or large corporate customers, or those with particularly complex needs, would be invited to obtain their services from a single office within the Group. These two elements would then cater for the entire geographic area. The emphasis was on inviting customers to take advantage of the new arrangements (the invitation being treated as a business development opportunity), rather than compulsion. Competitors had been observed to lose good quality business through forcing organisational changes on their customers.

It was recognised that an appropriate individual would need to be appointed to manage each System One element and these were selected mainly from the existing management team. These individuals, if they were to fulfil their respective

functions, needed to be granted a level of discretion in all areas of activity that enabled them to achieve the agreed objectives. This included the right to select and appoint staff, lending authorities which matched the needs of their existing and potential customers and access to specialist support services when necessary. The battles to achieve these freedoms were fought on their behalf by the writer at the Corporate level of recursion and are beyond the scope of this work. It should suffice to say that the major battles were, eventually, won.

During the pre-implementation phase these managers were charged with creating business plans for their areas, starting from a zero base wherever possible and examining what resources were required to manage the pre-existing business and what development targets were appropriate. For each element, the business plan would include all relevant aspects, such as the size and composition of the team, training requirements, marketing plans, service quality standards to be achieved etc. Technical help and general guidance was provided with these areas by the writer. The development of these business plans was perceived as being the first step in the creation of a metasystem for each element at Recursion 2.

The basic shape of the new organisation having been decided it was recognised that the rest of the organisation needed to be designed to support the purposeful elements. It was agreed that the four elements of System One represented the purpose of the system and that everything else that the system did should be aimed at supporting and enabling the fulfilment of that purpose. This led to further radical changes in attitudes and expectations.

9.2.5.2 System Two

A major source of conflict had already been resolved with the redesign of System One. Individual offices and officers were no longer competing with each other for the same business. There still remained however a need for System Two.

Mechanisms were developed to help in the allocation of customer accounts between the various segments and, whilst clear guidelines were drawn up for this, it was recognised that there would always be grey areas at the margins between segments. A formal process was defined by which a customer falling within the grey area would be approached and have the advantages and disadvantages of each area explained to him so that he could make an informed choice. A System Two monitoring function was established to alert the relevant element to emergent customers in the grey area so that action could be taken locally in the first instance.

Staffing had previously been a matter for the Regional Office (Recursion Zero) with people being appointed, from that level, to work within a particular office. This process was changed so that all the staff belonged to the Group. A mechanism was established for monitoring staffing needs in each operational element of System One through System Two as an attempt to maintain a balance between workload and staffing. Matters such as Corporate image and opening hours remained centrally decided although discretion was obtained to enable flexibility in some outlets.

It was agreed that monitoring of budgets would be undertaken through System Two as far as possible such that excess expenditure/income in one area could be balanced against shortfalls in other areas. This enabled the budgets to be continuously updated in line with business performance and changes in the demands or expectations of the elements. This was particularly important as the business environment was moving towards a period of recession when the achievement of centrally driven growth targets would demand considerable flexibility to take advantage of opportunities and counter threats.

9.2.5.3 System Three

The initial diagnosis indicated the absence of any adequate System Three function, the Chief Manager switching into this role when "necessary." The fundamental reorganisation of System One relieved this individual of any involvement in managing an office leaving him free to manage the Group. He retained a minimal role in the Large Corporate element of System One as a matter of political expediency with the customers. He took no "management" role in this respect, simply dealing with customers as part of System One operations. The deliberate granting of a significant amount of autonomy to the System One elements was intended to minimise the administrative cost of operating the Group. The metasystem functions were those considered necessary for cohesion and maintenance of the System.

System Three was comprised of four major elements, the Chief Manager, the Managers of each of the System One elements, a Lending Control Manager and a Resource Manager.

The Lending Control Manager and his team were made responsible for the evaluation of large lending propositions within the Group discretion, the quality control of major propositions being submitted to the Regional Office (e.g. ensuring that financial analysis had been correctly undertaken and that proposals conformed to expectations) and the audit of all lending within the group. They had no decision authority in regard to lending, this was all retained by the line managers. The function of Lending Control was to alert the line managers to lending falling outside the norms of the organisation. They also provided specialist advice to these Managers when necessary, e.g for difficult lending propositions and when recovery of funds was in doubt.

The Resource Manager was responsible with his support staff , for the allocation of all Group resources. The major aspect of this was staffing and he had a complete

overview of the need for, and availability of, staff throughout the Group. Whilst endeavouring to fulfil the bulk of this personnel function through the System Two channel, matters which could not be resolved this way were to be brought to the System Three function for decision. The Resource Manager dealt with all other matters of administration throughout the Group which could only be resolved at this level e.g. selection and allocation of new equipment, compilation of Group returns and reports, monitoring of performance.

The Chief Manager, Lending Control Manager and Resource Manager formed the continuing core of System Three with the System One element Managers being involved in debate and decision on all matters affecting the Group as a whole or their particular element. The Lending Control Manager and Resource Manager with their small support staffs were both allocated relevant audit functions to conduct through each of the System One elements. Lending Control focused on areas of commercial risk, the Resource Manager and his team responsible for aspects of procedures and systems as well as the wider matter of the organisation's fitness, e.g. training, recruitment.

Agreement on the composition and proposed style of operation for System Three took a considerable time to achieve. The individual managers concerned had been accustomed to working in a hierarchy where seniority determined power. They were developing a new organisation where the opinion of every, by their definition, relevant, manager would be sought prior to a major decision and the most knowledgeable individual would have the biggest influence. This threatened the sense of security and power felt by those who had been accustomed to the idea that "I Am the Emperor - and I Want Dumplings."(80) It was eventually accepted that predominantly, those with the necessary information should make the decisions rather than those with the most formal power.

This change moved the Group away from a situation where System Three had been considered to be autocratic to one which might be considered participative

and consultative or consensus seeking. Whilst in the limiting case, the Chief Manager would make a decision, he considered it better that the team should reach agreement as to what should be done. The perception of System One managers, who were now part of System Three, was that the operation of this aspect had changed for the better.

9.2.5.4 System Four

The Senior Management team agreed that the lack of a planning function for the Group was likely to leave it vulnerable to future internal and external developments. The System Four model of the enterprise was created by taking the management team together, as in System Three, and recognising that they comprised a model of the organisation, representing each element of System One plus Systems Two, Three and Three* at Recursion One.

This was not a situation where a formal management centre or operations room could be established, there was neither space nor necessary resources to create such an entity. The Chief Manager's office became this centre, changing from a room where Managers went when invited, to a "drop-in" centre where the team would regularly gather on a casual basis to discuss the changes and developments of the Group. These discussions rarely operated to an agenda, the concerns or ideas of the managers emerging from the conversation on a continuing basis, with each taking responsibility for following through any matters affecting his particular area. The Chief Manager dealt with issues arising from higher recursions and affecting the Group. This may be seen as a practical example of Robb's "complex conversations at a number of levels between just two or more individuals."(22)

The model of the environment was created by identifying those aspects which were considered could influence the future of the Group in the geographical area and starting to routinely monitor them. This covered aspects such as the arrival of new

competitors in the area, demographic changes in the local community, legislative changes and commercial developments of all types, i.e. new businesses moving in, levels of unemployment etc.. In this way the Senior Management team developed systematic monitoring of the environment on an ongoing basis.

The Lending Control Manager and Resource Manager were of importance in this System, commencing routine scanning of their areas of interest to find new ways of managing the business to minimise the cost of their necessary functions. The team also established a training programme for the entire staff of the Group, around 300 people, in order to prepare them for the future.

The Senior Management team had, by this stage of the process, changed from their previously acquiescent attitudes. They had become a self critical, questioning and learning group, prepared to examine any new idea and to experiment with it, a major change in approach.

9.2.5.5 System Five

Systems Three and Four now being functioning parts of the metasystem, the role of System Five was easier to elaborate and the position was occupied by the Chief Manager. Since the Three/Four conversations were invariably held in his office, he was easily able to monitor the ongoing dialogue and influence the direction of the conversation and decision. It was therefore rare for any System Five decision to need to be made.

The Chief Manager's attitudes on most matters had become clear over the period of the work undertaken and the constituent members of the Senior Management team had learnt his likely reactions, and, how to persuade him to shift his position. Debates between the conflicting needs for stability and adaptation were often extensive and the perceived advantages and drawbacks would be fully explored.

This normally led to an agreement being reached by the parties involved. When necessary the Chief Manager, in his System Five role, would normally sanction some form of controlled experiment to further determine the value of an idea prior to a change.

9.2.5.6 Communication and Information Channels

The process of change using the Viable System Model had opened up previously unused communication channels, in particular with regard to the dialogue between System One and the Metasystem. The team had developed such other channels as they required, and perhaps more importantly, had the freedom to develop and adapt these further after implementation.

Since the Group was a contained System of a much larger organisation, many aspects of communication, and much of the information in the system, was governed by the containing system. Nonetheless, the management team learned to use that information in different ways to more completely understand the operation of the Group. Centrally generated reports were understood to be performing a particular function within the Group and were treated accordingly. The redesigned organisation is shown as figure 9.5 on the following page.

Finco: Reorganisation using the Viable System Model

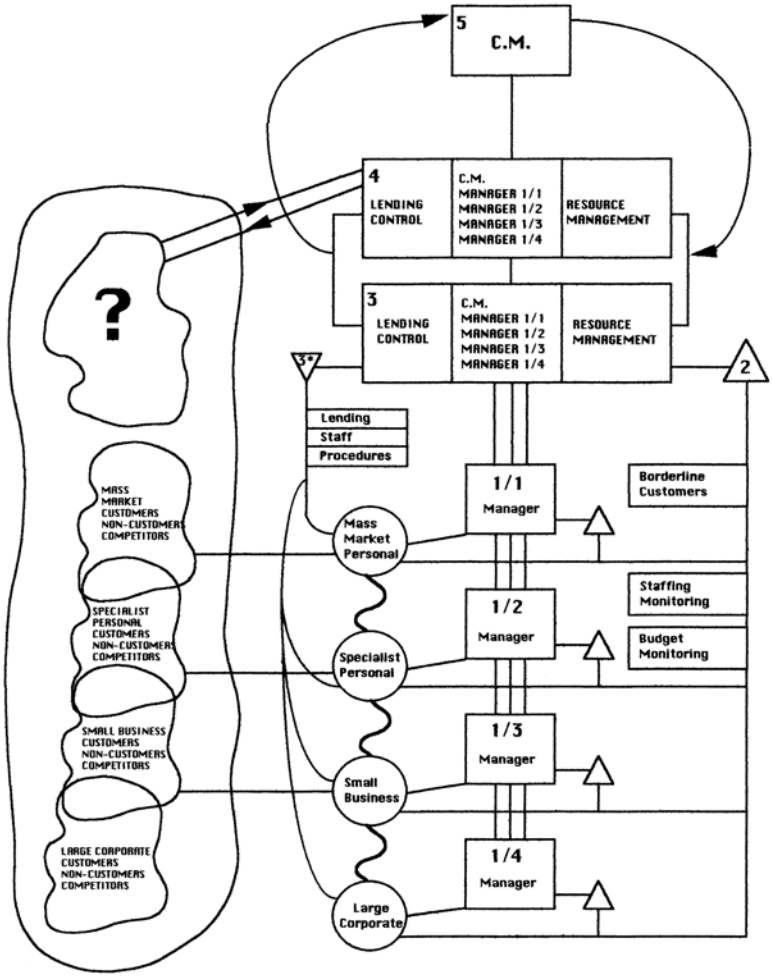

Key : —— **Represents a homeostatic loop**

Figure 9.5

288

Finco: Reorganisation using the Viable System Model

Figure 9.5

9.2.5.7 Commentary

Whilst implementation of the major structural changes took place on a particular day at the end of four months, the bulk of the changes in operating style developed naturally over the period of the project, about fifteen months. Both development and implementation were ongoing processes during this period.

The process was not without its difficulties and moments of high drama, including at various stages threatened resignations, requests for early retirement and battles with Head Office (Recursion -1). There were more battles with Head Office than anything else. The changes that were being proposed, which in detail went far beyond those reported here, had implications for every part of the organisation, and particularly, represented threats to those in the Corporate level metasystem whose roles and functions were being questioned by the changes in the Group.

Perhaps the most important lesson for those in the Group was the realisation that they had the power to change the organisation as long as they had the courage to do so. Whether the structure and processes designed to support the operation of the Group were right is a matter for debate. Different observers will perceive different successes and failures. What has proved right is that the team no longer complain about aspects of the organisation which malfunction, they sit down together and change it.

9.2.6 Recursion Two

The changes involved at this level were, in many ways more extensive than at Recursion One since the standard operating procedures and the computer systems of FinCo were designed to support the original style of organisation. Practical difficulties were many, but, "We perforce rely on the human genius to know how, precisely, to apply itself."(1 PG 518) The commitment and ingenuity of the staff at

all levels of the organisation were brought in to play to effect the major changes and ensure that the difficulties were overcome.

It is not the intention in this section to report all of the work undertaken at Recursion Two. It must suffice to say that it was undertaken in the same participative manner as at Recursion One, the staff identifying the problems and developing solutions with technical support from the writer. This section will focus exclusively on the organisation of the Large Corporate element of the business.

9.2.6.1 Building a Process of Self-organisation

The restructuring decision at Recursion One led to the creation of a Large Corporate element of System One. This was intended to deal with customers throughout the Group having borrowing requirements in excess of £100k or turnover exceeding £1m. These figures were agreed by the management team as the levels above which customers tended to have more specialised financial needs. The figures were treated as guidelines and not absolute limits. The element drew business from all the offices of the Group although only customer relationships were moved, by agreement, not the accounts themselves. This generated a number of procedural difficulties which were eventually overcome.

The most difficult aspect of the change was how to organise the unit itself. This unit had to deal both with existing customers and to have capacity for business development within the given constraints on the number of people that could be used. An early decision was made to locate this unit at the largest office of the Group which had sufficient space and was in the centre of the major commercial district of the town at the core of the Group.

The project commenced with a review of the existing hierarchical structure, the objective of the management being to discover whether this could be adapted to

accommodate the additional business and staff. This initial structure was as shown in figure 9.6 on the following page.

The study of this structure was conducted through both statistical analysis and personal interviews. It revealed that each of the managers and supervisors was devoting around 50% of his or her time to controlling and checking the activities of his subordinates. There were five layers in this hierarchy and the dominant function of the senior staff was checking that the lower staff had checked their subordinates work - checking that the checkers had checked the checkers checking. An absurd although not inevitable result of the growth of hierarchy and bureaucracy.

The personal interviews revealed considerable dismay on the part of these senior staff who, having spent a number of years developing professional expertise at the provision of financial services, were spending most of their time on activities that they considered as pointless and for which they were not trained. This included their management function for which at the most they had had 4 weeks training in an average twenty year career.

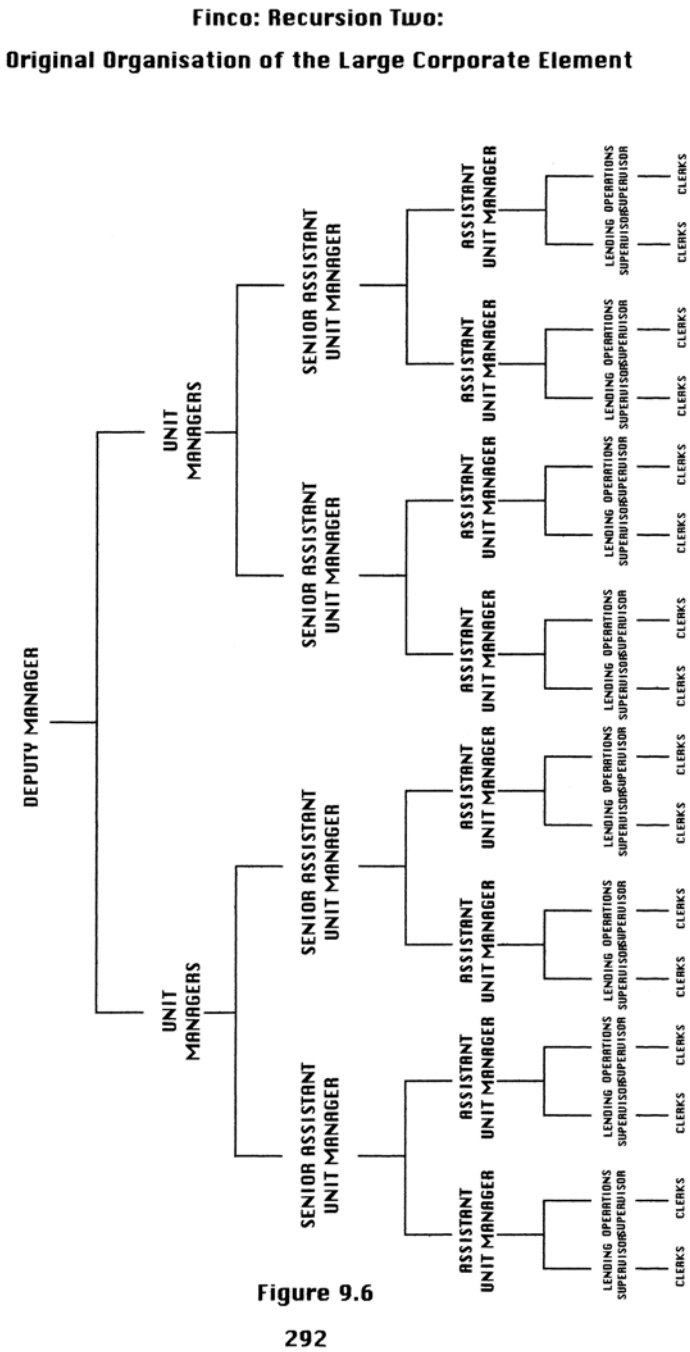

Figure 9.6

292

Finco: Recursion Two:

Original Organisation of the Large Corporate Element

Figure 9.6

The discussion of these problems led the team to discuss ways of releasing the professionalism of the team members to undertake more productive, purposeful activity, whilst maintaining an acceptable degree of control over the operations and lending aspects. It was agreed that each member of staff, properly trained, was a mature and capable individual and that a significant element of trust could be brought in to play. It was decided that most individuals could be relied upon to perform an allotted task and that critical areas could be monitored through reporting and control procedures. A sample check of the checking showed that few errors were discovered, tasks generally being carried out to the required standard.

The aim of the review now became to find a way of releasing the skills of the staff to engage in professional activity while minimising the control activity. There were three key skill areas identified, Customer relationship management, financial analysis and account operations.

A major difficulty of the original structure was that the four operations units were too small to function properly, such that when one member of the team was absent there were inadequate resources to respond adequately to customer requirements, staff either fulfilling minor functions for which they were overpaid or attempting to fulfil more senior roles for which they had not been trained. It was considered that by merging these four units a proper balance of staffing could be achieved to overcome these problems. The impact on customers of this change was seen to be minimal since most contacts took place with the Supervisory staff. Customer Operations then became a System One element of Large Corporate at Recursion Two, acting as a service to customers and headed by its own manager.

This left the Customer Relationship and Financial Analysis activities to be organised. Under the original organisation these activities were intermingled such that any member of staff would undertake both during the course of the day. It was considered that these activities could be performed more effectively and efficiently if staff were allowed to specialise in one or the other. What developed was a form

of self-organising matrix structure as shown in Figure 9.7 on the next page. The customers were divided for relationship purposes into different industry sectors such as, medical and dental, engineering, construction, hotel and leisure, and retail. Each Relationship Manager was selected to work on a particular industry where he either had, or would develop, specialist expertise. This was a means of enabling communication with the customers, by speaking the same language, and increasing the variety absorbing capabilities of the individual managers whilst reducing the extent of the environment which they needed to consider. The customer accounts were then allocated to these Relationship Managers. This was again done by introduction and persuasion rather than unilateral dictat and was largely successful.

For financial analysis it was recognised that the analyst needed a skill level which matched the complexity of the accounts to be analysed, rather than to manage the customer relationship. Financial analysis was seen as supportive to Customer Relationship management. Consequently the customer accounts were re-analysed, by the Relationship Managers and lending officers and fitted into four categories of complexity, very complex, complex, moderate and simple. Numbers and grades of Analysts were then selected to match these categories.

Each Analyst, like each Relationship Manager had a portfolio of accounts with which he was involved, and the matrix, after some experimentation, was drawn up so that each Relationship Manager could be supported by up to four analysts and each Analyst could undertake work for up to four managers. It was discovered that if four were exceeded on either side the situation became too complex for the individuals to manage.

Organisation Chart for the Large Corporate Element

RELATIONSHIP MANAGERS

FINANCIAL ANALYSIS	1	2	3	4	5	6	7	8	9	10	11	12
	X	X	X	X								
V			X		X		X	X				
	X			X					X		X	
		X	X			X		X				
C				X		X				X		X
					X			X		X		X
							X	X		X	X	
M					X	X			X			X
		X					X		X		X	
	X		X									X
S		X		X	X				X			
						X	X	X		X		

Key: 1 - 12=Various Business Sectors, e.g. Medical, Construction etc.
V,C,S,M = Complexity category of Relationship
(V=Very Complex, C=Complex, M=Moderate, S=Simple)
X = Intersect of Relationship and Analysis

Figure 9.7

295

Organisation Chart for the Large Corporate Element

Figure 9.7

Using this system of self-organisation there was no hierarchy in this section, each individual being responsible for the fulfilment of his or her duties and needing to work co-operatively with each of his or her colleagues. A system of mentoring was established for dealing with pastoral issues such as career development and appraisal. The necessary administrative duties such as absence records and stationery requisitions became a nuisance task, allocated in turn to each of the analysts, regardless of grade, for a period of three months. It was thus in nobody's interest for this activity to become pathologically autopoietic as is so often the case.

A system of monitoring caseloads was established for all staff to ensure that nobody became overloaded. The system allowed for accounts to be reallocated between analysts if workloads grew out of line with each other and for the analysts to continuously take on more complex accounts as their skills developed. Similarly with the Relationship Managers, they could develop their own careers and rewards by seeking new business within their industry and by moving towards more complex cases as their expertise grew. The Senior Relationship Manager, operated both within this matrix and as the System One Manager responsible to the Metasystem of the next higher recursion.

This system of organisation, after some initial teething difficulties while the staff adapted to the new way of working and the operational difficulties were resolved, settled well and is reported to be working in the same way some two years later. The impact of the change was, as had been hoped, to release considerable time from checking and monitoring to concentrate on purposeful activity. The gain has been agreed with the team as being about 30% overall, such that with no increase in the number of staff in the area, considerable additional time is dedicated to managing and developing customer relationships. The original estimate of time lost to checking was 50% and the remaining 20% of time not clawed back is that which is either necessary because of legal and accountability constraints or forced by the inadequacies of the Information Systems in use by FinCo and controlled at the corporate level.

Whilst in the initial period there was a slight increase in errors made, this was soon resolved and is now perceived to be lower than under the previous system. The staff are generally more content and regard their jobs as more satisfying and fulfilling than previously.

9.2.6.2 On Success

The implementation of the changes described, other than the major structural change, took place largely as the outcome of the process of review. Once the staff had agreed what needed to be done, and formal sanction had been obtained where necessary, they went back to their positions and carried it out. The writer acted as co-ordinator for many aspects to ensure that all happened in harmony, although much of this work was progressively passed to the Group Resource Manager as part of his ongoing duties. He is now responsible for ensuring that environmental monitoring continues and that enquiries are triggered into the need for further change.

Technically this was a successful project, the Viable System Model was initially implicitly used to guide the process of developing change. Most of the concepts were expressed in the language of the system studied rather than that of cybernetics although more explicit use was made as the project progressed. The process led to a renovated organisation which can be seen to be capable of learning and adaptation - the single largest legacy of the project. There are, though, other ways of measuring success.

Financially, the project was again successful. The Group showed the second fastest growth in profit during the subsequent financial year of any Group of offices, around 30%. It was beaten by one Group whose growth in profit had been driven by cost-cutting rather than business development. The increase was achieved at a

time when the UK economy had moved into recession. What growth would have been achieved without the changes it is impossible to say.

Further evidence of success is shown by the keen demand throughout FinCo for those staff, particularly management who were involved in the process. They are seen to be highly motivated and change oriented staff with skills, abilities and experience not found elsewhere in the organisation.

Finally, if imitation is the sincerest form of flattery, a further six Groups were remodelled on the same lines and modified forms of the whole system are now being replicated throughout FinCo. The organisational forms developed by the Group may not be perfect but are considered a major improvement on the previous situation.

9.2.6.3 Summary

This case has shown how the Viable System Model may be used in a large organisation to provide not simply a tool for diagnosing and redesigning an organisation but within a cybernetic process of change. Whilst the case as presented is very brief, the whole process over a lengthy period involved many experiments and iterations to arrive at satisfactory outcomes.

Key tools were the concepts of purposeful and supportive activity. These were used in the breakdown of the Group into manageable elements that better matched the requirements of the customers. The concept of variety demonstrated a value in helping to determine the skill levels necessary for the satisfactory conduct of the business in each operational element. Technology played only a minor role in this application, most of the communication and information processing being by individuals face to face and able in that way to transmit and receive both the synactic and semantic meaning of the messages conveyed.

This was a case of the use of "Science in the Service of Man"[69].

9.3 Cakes

9.3.1 Introduction

The study of Cakes was undertaken as remunerated consultancy. The Viable System Model was used as both a diagnostic tool and as a device for explaining the necessary changes. The intention was to increase the effectiveness of Cakes and to focus the activities of non-purposeful parts of the organisation.

9.3.2 Background

The study took place under the broad title of an Organisation and Planning review and its explicit objectives were to:-

Define and analyse the existing roles of staff at First Hand level (the lowest level of Supervisor) or above.

Assess the information requirements for each role.

Redefine the structure and roles as necessary.

Prepare brief job outlines with specific reference to decision, authority and responsibilities.

Specify a production planning mechanism.

It was anticipated that the outcomes would be, clearer job definition, clear authority and responsibility and improved purposeful communication. The project was conducted through a series of interviews with all relevant staff, observation and discussion and a process of negotiation and debate with the Senior Management. Prior to the commencement of the review a new General Manager had been appointed to the factory and was responsible to the Managing Director for all aspects of the site activity. A junior Manager had also been appointed, these two staff being the first senior appointees from outside the factory for around thirty years.

9.3.3 System Identification

The factory, which became the System-in-focus was organised in a series of functional areas on three floors. These dealt with, Raw Material Stores, Mixing, Baking, Creaming, Packing and Despatch. The Raw Material Store and Despatch were on the ground floor along with one Baking, Creaming and Packing line, a second Baking Creaming and Packing line was on the first floor, with Mixing on the second floor supplying both Baking lines. Each of these areas had its own Manager or Supervisor. In addition to these, Cakes had units dealing with Product Development, Personnel, Hygiene, Engineering, Quality Control and a Canteen. The original organisation is shown in figure 9.8 on the following page. Initially, the containing system was defined as Cakes Holdings, which operated a second factory and dealt with Cake Sales, and the contained systems as the functional areas, each of which was potentially viable.

The initial review found that 93 staff out of a total of 300 were receiving wages related to Supervisory or Management positions. It was discovered that a number of these positions had arisen over previous years as a means of maintaining industrial harmony when the factory was in danger of being closed down. It was

found that a significant number of Supervisors had no staff under their control. The process of review revealed a number of significant faults within the organisation.

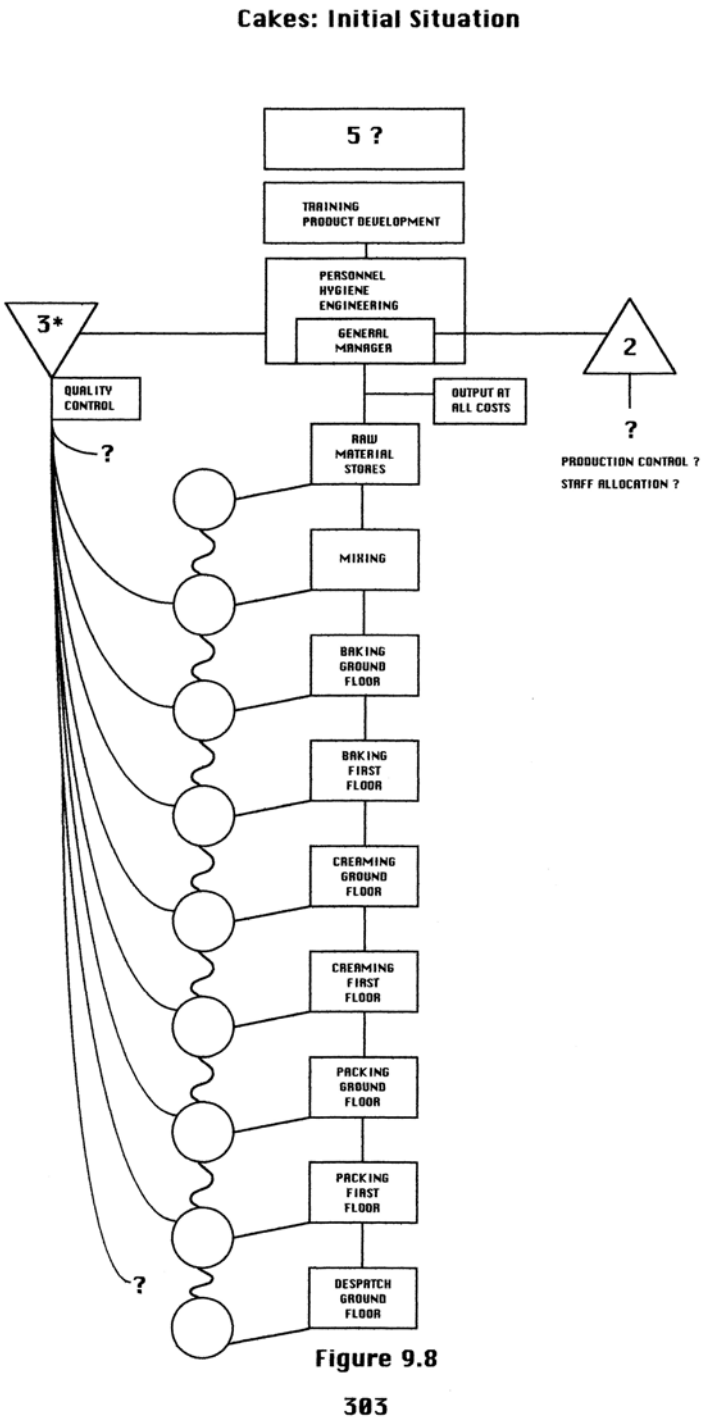

Cakes: Initial Solution

Figure 9.8

9.3.4 System Diagnosis

The purpose of the organisation was debated with the General Manager and representatives of Cakes Holdings (Recursion 0) and agreed to be:-

> "the production of cakes in accordance with customer requirements."

There was a limited understanding of roles at all levels within the organisation and no adequate articulation of the performance expectations of Senior Management. There was no clear delegation of authority. Managers and Foremen were unaware of the limitations upon them, and their number served to increase the uncertainty of expectations. Management throughout the plant was thoughtless, that is that the traditional or prevailing methods were used regardless of any apparent need for change. Managers and staff throughout the Factory adhered to a "clock" mentality.

The Factory was heavily unionised and it was considered by many staff that the Union was a major influence in the running of the operation. Wildcat strikes were frequent despite recent legislation aimed at preventing them. The belief that the Union was powerful had had two principal impacts, since it was perceived to be powerful its actual power had increased, and, the ability of Managers to Manage was inhibited by the perceived erosion of their power.

9.3.4.1 System One

There were many System One elements with Managers being responsible for only small parts of processes. They had no guidelines as to their roles and responsibilities and tended to pass the blame for errors to other areas. Supervisory positions existed where there were no staff to supervise. This lack of clarity tended

to generate interference in other areas, individuals exercising authority without responsibility.

Some areas had more than one Manager, causing further confusion. In one case the number of Supervisory staff exceeded the number of operators. Rules and Procedures of all types were comprehensively ignored and Management failed to correct the abuses.

The Managers generally considered that the Supervisory staff were of poor quality, citing the need to prompt and guide them throughout each shift. This behaviour was observed during the project and it was also found that some Foremen were unable to speak in a language common to themselves, their subordinates or Managers. This clearly contradicted the cybernetic requirement for effective communication channels and transducers.

9.3.4.2 System Two

No System Two mechanisms could be discerned in this case. Work and production scheduling was undertaken by each individual unit without regard to the activities of other units. This led to severe problems of peaks and troughs in the workloads of all areas. Particularly important in this regard was the failure to schedule cake mixes which consequently often stood in the Mixing area for some time as a result of which they would fail at the Baking stage. This generated considerable waste.

There was no flexibility of staffing between the different units and it was considered likely that as a result the Factory was generally overstaffed. Staff in some areas were often to be seen idling while waiting for the next task to arrive at their work station. At the same time other staff would be overstretched.

9.3.4.3 System Three

There were no effective control mechanisms nor performance standards in place to enable monitoring of either Departmental, process or personal performance. Such mechanisms as were in place appeared counter-productive by focusing attention on one or two aspects of performance, such as throughput or labour utilisation, and ignoring the systemic consequences of maximising these aspects. For example, over-production against customer orders, whilst maximising throughput and labour utilisation incurred additional costs for freezing, transport and stocking. These costs were simply accepted as necessary to maintain performance in one area. The managers responsible were not concerned with this as it was "somebody else's problem."

The factory wage rates were the lowest in the area and the staff systematically abused the shift Premium and Overtime systems to compensate. This shows failure at both System One and Three. Hygiene requirements (covered by legislation) were ignored, even by the Hygiene Manager directly responsible for their implementation.

The Personnel function also formed part of System Three. Managers complained that no support was forthcoming from this area to cover absences, they were simply instructed to cope. The formal procedure which should have guaranteed them replacements for missing staff was ignored. Further investigation revealed that neither the line Managers nor the Personnel staff had a mechanism for determining the necessary staffing level. They adhered to the numbers that they had always used regardless of changes in product complexity etc.. The Personnel Officer for the Factory saw her purpose as being to minimise costs by forcing Managers to cope. The dysfunctional outcome of her approach had not been recognised by her Seniors.

The Engineering Department, a further part of System Three, had become pathologically autopoietic. The staff were pursuing their own interests rather than

supporting the needs of the production areas which they had been employed to service. This led to situations of dangerously defective equipment being used by production staff and line stoppages through failures of machines due to a lack of routine maintenance. System One Managers were frustrated by this, often resorting to undertaking minor adjustments and repairs to machines themselves.

9.3.4.4 System Three*

There was little evidence of audit activity other than quality checks which had become routine rather than sporadic, quality being assessed through standard procedures at various points of the production process.

Quality control was ineffective on the production line. An intended 100% final inspection rate being nearer to 5% in practice. The throughput rate on the lines was too great for any adequate visual inspection to be made. Despite an overall reject rate of 10%, identified at the baking stage, or through damage during packaging, the staff considered that quality was good.

9.3.4.5 System Four

There was some evidence of System Four activity. Product Development was ongoing, both enhancing existing products and developing new ones in conjunction with the customers. Communication of the need for new products and their implementation was poor, products being introduced to the Production staff with no forewarning. Production staff regarded new products as being a nuisance and as interfering with the, to them, smooth operation of their areas. Since the implementation process was poor there were major product quality problems when new products were introduced.

A training programme had been introduced at Cakes twelve months before the review with the intention of increasing the skill levels of all Managers and Supervisory staff. Despite the significant cost of this programme no apparent benefit had been achieved. Staff found that on their return from courses they were either prevented from introducing changes, or, where they attempted to do so and a dispute arose with the Union, the Senior Management would not support them. The outcome of training was increased frustration rather than improved performance. This was the sum total of System Four activity, both aspects being ineffective.

9.3.4.6 System Five

It will be apparent that there was no effective System Five at this level of organisation at the commencement of the review. There was no "ethos," no clear sense of purpose or policy being generated for the system. The General Manager saw this as his role but recognised that he needed support to bring a functioning organisation into operation.

9.3.4.7 Communication and Information Channels

Official communication throughout Cakes was generally poor, most staff relying on the grapevine or the Union to discover what was happening in the organisation. Particular examples of failure have already been cited, (9.3.4.1, Page 305). Current customer orders and instructions were often ignored, except at the Despatch unit, with Managers producing according to the previous week's customer orders. The Stores Manager was ordering from suppliers to maintain a stable supply of all ingredients regardless of whether or not they were needed for manufacturing. These approaches led to a high level of waste of both raw and finished materials.

9.3.4.8 Summary

The catalogue of symptoms indicated an organisation which was out of control, characterised by poor communication, restrictive working practices, abuse of systems and procedures, weak line management and strong Union power. These perhaps reflected the recent history of the factory which had been treated as a cash cow by Cakes Holdings whilst operating under a continuing threat of closure. A set of circumstances which are not designed to boost the morale of either management or staff.

Structurally it was evident that a level of recursion had been missed in the organisation which moved directly from the Factory level to the detailed Operations level. It was considered that this was responsible for a significant number of the problems.

9.3.5 Redesign

The foregoing diagnosis led to considerable discussion with the General Manager the outcome of which was the following normative statement of Management Philosophy:-

> The purpose of the organisation as studied is the production of a variety of cakes to fulfil customer requirements. Any activity which does not fulfil this purpose must be supportive to it. If an activity is neither purposeful nor supportive to the purpose its continued operation must be questioned.
>
> The need of the organisation is for control to be exercised as closely as possible to the source of difficulty or disturbance.

> This means that Managers must have maximum autonomy in the conduct of their activities, subject only to those constraints necessary to ensure the cohesion of the organisation. That is, Managers must be allowed to manage.
>
> This approach shall be applied throughout the organisation so that ultimately, operatives on the production line must learn to manage themselves, constrained only by the need for cohesion.
>
> Constraints necessary for cohesion include sharing the objectives of the organisation.

The practical interpretation of this was that as far as possible, all staff should have responsibility for controllable variables which directly affect their performance. They must have decision authority to carry out their delegated tasks and they must have specific, relevant and measurable performance standards to work towards.

It was further agreed that Managers must be supported by Senior Management. They should also be responsible for training and development of their subordinates and that performance standards should be negotiated on a continuing basis to form an agreed resource bargain. These must not be imposed from above.

The next section reports work at Recursion One of the respecified chain of systems. This introduced a new level of recursion so that the chain became, Cakes Holdings containing the Cakes sub-system. This contained four sub-systems (Stores, Line 1, Line 2 and Despatch). Lines 1 and 2 both contained three sub-systems, Mix & Bake, Process, Despatch. This chain of systems is shown in figure 9.9 on the following page.

Cakes: Respecified Chain of Systems

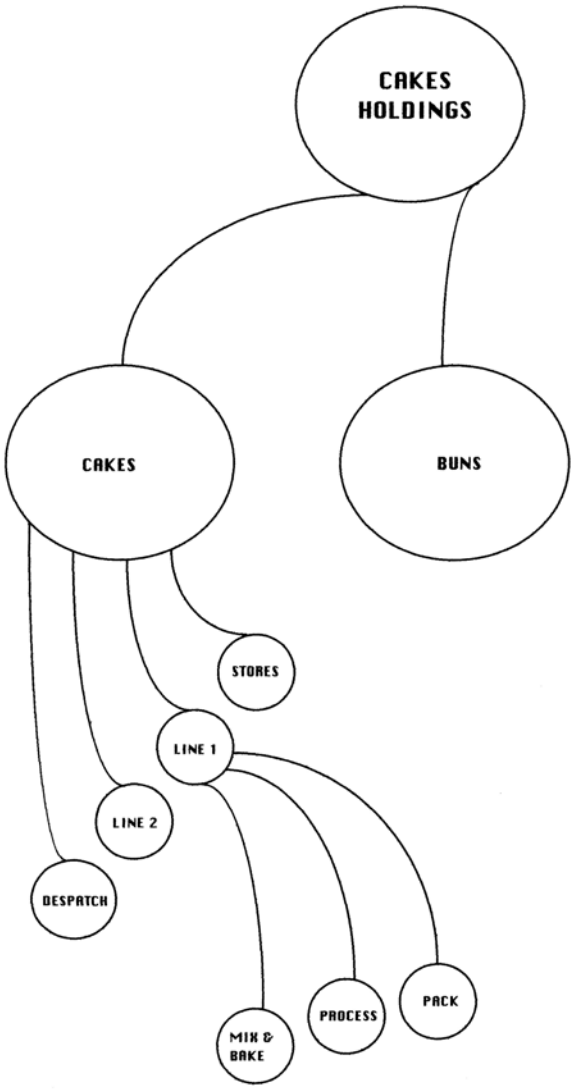

Figure 9.9

313

Cakes: Respecified Chain of Systems

Figure 9.9

9.3.5.1 System One

It was agreed that, if the purpose of the Factory was to manufacture Cakes, then System One at the Factory level of recursion (Recursion One) was comprised of the Manufacturing activity. This was made up of four elements, Raw Materials, Line 1 and Line 2, attending to the whole manufacturing process from mixing to packing, and Despatch.

These elements, each under the control of a Manager or Superintendent, were to report to a newly appointed Manufacturing Manager who represented the first System Three function. The System One element managements would be responsible for both manufacturing and for the routines of quality control, hygiene, machine minding and health and safety procedures within their area. Performance standards for each element were to be agreed between its Manager and the Manufacturing Manager.

9.3.5.2 System Two

A prime role of the Manufacturing Manager would be to co-ordinate the activities of the different areas through production planning and scheduling to ensure that all were working in harmony. Procedures would also be installed for the reallocation of staff between areas as necessary to smooth the production flow.

9.3.5.3 System Three

The elements of the new System Three, in addition to the Manufacturing Manager, included Engineering, Technical (Hygiene & Quality) and what came to be called Services, dealing with Personnel functions and the Staff canteen and shop.

Each of these areas was to be recognised as existing to enable System One, (Manufacturing) to fulfil its purpose. As such, performance standards were to be agreed between the Managers of these units and the Manufacturing Manager. For example, in the case of Engineering, maintenance schedules and elapsed times between machine breakdown and attendance by an engineer were agreed. This would not only enable the monitoring of performance but also provide a rational basis for negotiating the budget of the Engineering Department. The expectations from that Department being known, it would be much simpler to determine the appropriate numbers of staff and skill levels necessary for the performance of their duties. For example, it would be possible to measure the benefit of an improvement in response time to machine breakdowns (a reduction in lost production) against the labour cost of an additional engineer.

Similar approaches were taken to the Technical and Services areas, and communication between all parties was encouraged through regular meetings and discussions, particularly informal sessions in the Production Office and canteen.

9.3.5.4 System Three*

The routine aspects of Quality Control having been allocated to System One, for implementation at Recursion Two the audit function at Recursion One was redesigned. It was agreed that Recursion One audits would be undertaken by all elements of System Three in respect of their areas of interest. Reports would be made available to all other parties in both written and verbal form.

For example, the Technical unit would be required to ensure that Quality Control procedures and records were being maintained and corrective action taken where necessary, rather than undertaking those functions themselves. The Services unit was encouraged, in its Personnel guise, to visit the Production floor and engage in conversation with the staff rather than hiding from them as had previously been the

case. This was seen as a way of enhancing their understanding and knowledge of the operational activities as well as enabling operations staff to voice their opinions and concerns.

9.3.5.5 System Four

The activities of Product Development and Training were maintained at Recursion One and the proposed enhanced functioning of System Three was to be used to enable more effective implementation of both aspects. The functioning of System Four was to be developed by involving each of the other elements of System Three in this unit. It was specified that they should undertake systematic research activity in their areas of expertise to enable ongoing adaptation and development of the Factory.

Engineering would commence seeking new and more cost effective equipment. The Manufacturing Manager would examine different production processes. The Technical staff would research the changes demanded by new legislation on Food Safety and Hazardous substances. These activities had historically either been ignored, or pursued after threats and warnings from external agencies or higher recursions.

9.3.5.6 System Five

System Five was represented by the General Manager. He carried complete responsibility for the operations of the Factory, but with the revised structure in place would be able to act in a co-ordinating role between Systems Three and Four in which he would take no direct part.

His role was defined as being to act as an arbitrator between these two systems, using his knowledge of the System at Recursion Zero and his resource bargain with that system where he acted as a System One Manager, to balance the conflicting demands for stability and adaptation. His belief was that having appointed Managers to undertake tasks on behalf of the Factory he should only become involved with them in the event of a crisis or when his help was sought.

This approach by the General Manager was expected to lead to a greater sense of autonomy throughout the System, although the freedoms of the Managers had now been designed. The reorganisation of the system at Recursion One is shown as figure 9.10 on the next page.

9.3.5.7 Recursion Two - Production Lines One & Two

Production Lines One and Two are treated together as their organisation was identical. Changes in Stores management and Despatch will not be included in this work.

9.3.5.8 System One

Each production line was to be broken down into three System One elements, Mixing & Baking, Processing, and Packing. Each of these elements was to have its own Superintendent responsible for performance of the element and reporting to the Process Manager who represented the metasystem.

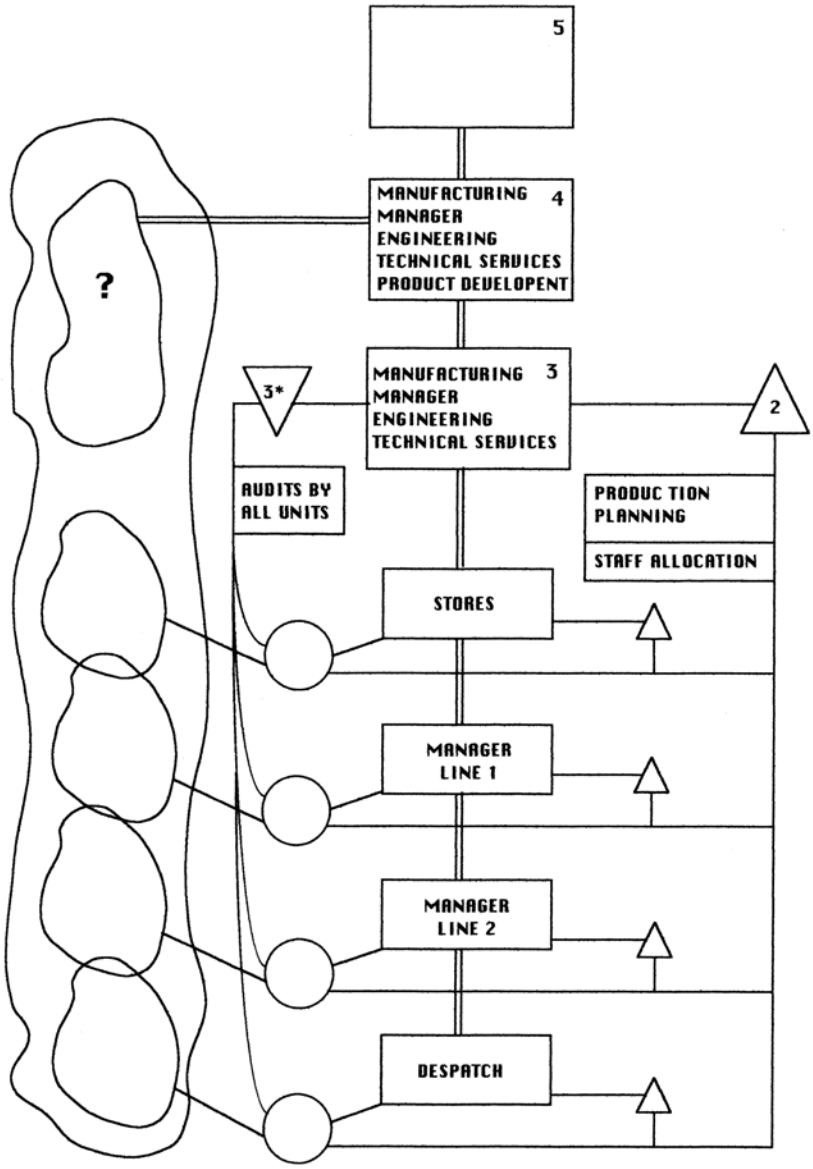

Figure 9.10

318

Cakes: Reorganisation at Recursion One

Figure 9.10

The Superintendents were to be given complete operational responsibility for their areas, including the freedom to negotiate resources and performance standards with the Process Manager. Staff were the principal variable resource, other items such as ovens being relatively fixed. The responsibilities would include routine checks on product quality, maintenance of hygiene standards and daily cleaning routines. The Superintendents were to have the freedom to deploy their staff in pursuit of these duties as they saw fit.

9.3.5.9 System Two

Production scheduling and planning mechanisms were introduced along with a Batch Control system. This was to enable production to be tracked throughout the Factory and enable System Three to be alerted to emergent problems, the Process Manager would devote most of his time to this co-ordination role. Thus once performance standards had been agreed, and the daily or weekly production schedules issued, the role of the Process Manager would move from System Three to System Two, aiming to balance and co-ordinate the production process to achieve a free-flowing line. This was intended to avoid the previous problems of unfinished products deteriorating through delays between processes.

9.3.5.10 System Three

It was considered that the Process Manager would fulfil the System Three function. This involved taking responsibility for the whole production process on a particular line, agreeing resource bargains (performance standards, staffing levels) with his subordinates and developing production schedules. He would also be responsible for all other matters affecting the line, e.g. Staff management and discipline, job rotation, etc.

9.3.5.11 System Four

The scope of the development function at this level of recursion was very limited. The prime concerns were with anticipating and avoiding emergent production problems, e.g. shortage of staff, peak workloads.

Direct development activity was to be concerned with considering ways of reducing the levels of resources required to operate the production line and the handling of new product introductions. Training of Superintendents and operators would become a major part of this function, both in the formal sense of identifying the need for training courses and the informal "on the job" training which was an ongoing commitment.

9.3.5.12 System Five

The Process Manager was seen to create the "ethos" of the production line by extension of his own personality, the mood and style of the Manager seeming to determine the mood and style of the line. The individuals appointed were expected to ensure the ongoing development and adaptation of the Line within the constraints imposed by their membership of the next higher level of recursion. As System One Managers of Recursion One, these Managers represented the identity of the System in both Recursions, displaying Recursion Two to Recursion One and vice versa. They were the key linking element in the multi-level system.

9.3.6 On Success

The major changes in organisation outlined above were implemented by the managers in conjunction with a number of changes in procedures and operating practices. In terms of increasing the efficiency and effectiveness of Cakes in pursuing its purpose the project was undoubtedly successful. Numbers of Supervisory staff were reduced by 39, the bulk of these staff being redeployed within the organisation although there were some job losses. Production levels were maintained, after a short term fall, and have subsequently reached higher volumes and quality and hygiene standards have been raised. Further help was given to Cakes in the drafting of job specifications which enabled the negotiation of performance standards and clarified limits of authority.

Cakes is now a more viable organisation, under control at all levels with a more contented workforce. The role of the Union has diminished as purposeful communication between Managers and staff has increased following the changes. These have served to give individuals a greater control of their own future through direct involvement in designing their own freedom. The reorganisation at Recursion Two is shown in figure 9.11 on the following page.

Cakes: Reorganisation at Recursion Two

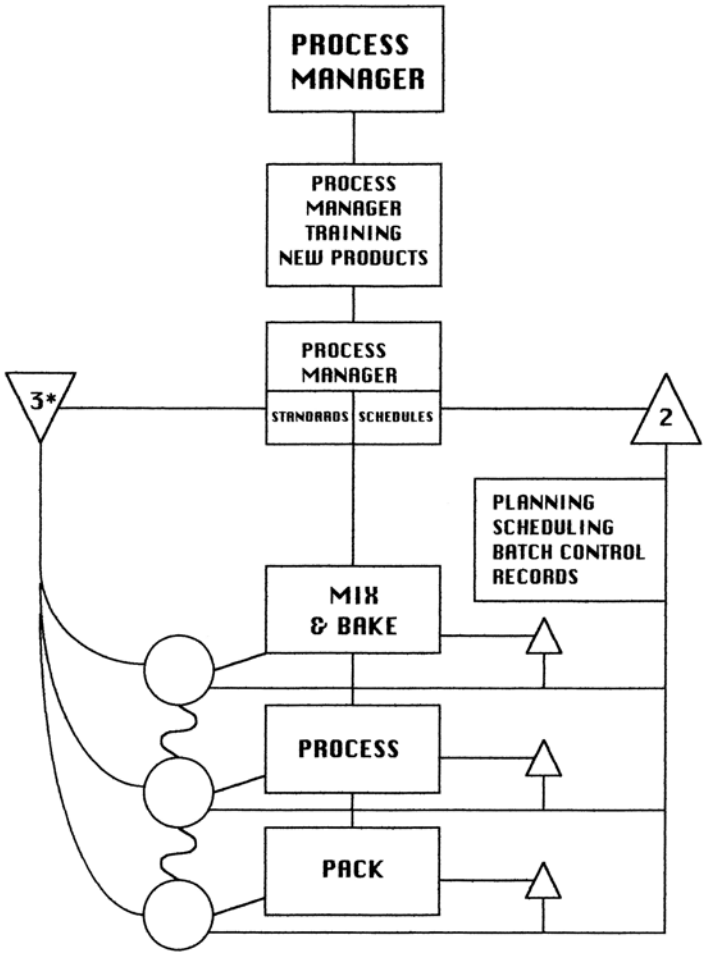

Figure 9.11

322

Cakes: Reorganisation at Recursion Two

Figure 9.11

9.3.7 Summary

The Viable System Model played a major role in the understanding of the organisation of Cakes and in the derivation of solutions to the perceived problems. The diagnosis and redesign was accomplished by the writer in conjunction with the staff in a period of only four weeks. Implementation by the Staff themselves was accomplished later.

This application did not make great use of contemporary technology. The skills, language and attributes of the staff at the time of the intervention would have made this a waste of resources at the time. All new procedures and reports were developed, within the holistic modelling, to be generated by people. Nonetheless it was evident that there was a role for technology in the production planning and control systems and System Four at Recursion One is now examining how this need can best be fulfilled. The first step has been taken and that is the introduction of training for all relevant staff in the use of Personal Computers. These are envisaged as providing the technological platform for a distributed information network when connected through a Local Area Network with Electronic Mail or message transmission facilities.

Whilst the Viable System Model made a major contribution to this project, the importance of the people involved in the process must not be underestimated. The Viable System Model provided a diagnostic and design tool, the people of Cakes provided the information and, perhaps more importantly, made the changes successful. Thus whilst the diagnostic power and the speed of use of the Viable System Model are shown, the importance of the purposeful behaviour of individuals is emphasised.

9.4 Teaching Viability - the Viable Classroom

9.4.1 Introduction

My experience of the Viable System Model is that reading about it and talking about it do not adequately demonstrate its power and utility, nor do these processes fully develop understanding. It was only when I began to undertake projects using the model that it became a meaningful approach.

When asked to teach Organisational Design and Behaviour to an MBA class in Singapore, a course which is concerned with organisational cybernetics, I considered that there were two teaching methods available to me. The first was the traditional, and somewhat sterile, approach of standing in front of a class lecturing. The second was to engage in an action learning process with the students using a predominantly case study approach.

The cultural norms of the students suggested the first approach but, the second seemed more interesting, and on the basis of my experience of learning about the model, a more effective way to understand the ideas and concepts of cybernetics. I decided to use the Viable System Model to structure the organisation of the class which was to be taught about that same model. Prior to the commencement of the classroom sessions the students had been asked to read a course manual, prepared by Jackson(15) and "Diagnosing the System for Organisations," Beer.(3) They were also invited to introduce examples from their own workplaces. The class had recently completed a course in Human Resource Management which had introduced them to the dominant organisational models, e.g. Machine, Human Relations and Systems.

The planned classroom sessions extended over twenty hours and consisted of two major parts. First a worked example was used to explore the concepts and ideas in

a practical way, theory emerging from the practice as each new area was covered in much the same style as "Diagnosing the System." The second part of the course was a case study based on the "Cakes" project already reported in this chapter. The aim was to introduce the students to the theory and practice of Organisational Cybernetics, demonstrating the relevance to them of the approach.

9.4.2 Classroom Organisation

The purpose of the system was:-

> "for students to learn about organisational cybernetics as demonstrated in the Viable System Model."

The relevant system for pursuing this purpose was considered to be the "class" which included the students, myself, the teaching materials and supporting texts and the classroom itself.

Traditional classroom organisation would treat the students collectively as a single System One element, or alternatively as around 40 individual System One elements. Either of these approaches leaves the Lecturer facing an uncontrollable mass of variety which he or she attempts to equal by speaking loudly enough to be heard throughout the room and making assumptions about what needs to be taught, i.e. the teacher teaches every student the same things, regardless of their individual needs. Alternatively, every student is set the same work, and the lecturer allocates an identical amount of time to each one. Both of these approaches are unsatisfactory, the first because it teaches the student only what the lecturer considers relevant, the second because the same difficulties are covered several times and some difficulties are not covered at all.

The "system-in-focus" being the class, its containing system was decided to be the course programme of thirteen modules, since this specified what was to be learned during the classroom sessions and thereby acted as a metasystem to the class. The contained system initially seemed to be the individual students.

Since the class was divided for private study into study groups I decided to use these as the viable parts of the viable system, introducing another level of recursion into the class. This meant only attempting to contain the variety generated by five groups, the students working together being able to resolve many problems with the ideas and concepts autonomously within the Group, thus distributing the sources of command and control throughout the classroom.

9.4.2.1 System One

The System One elements were now the five groups of approximately eight students. Each of these needed to have its own local management. It was suggested to the groups that they should each appoint a chairman to act as group controller and ensure that time constraints for undertaking each part of the practical work were met, (the System Three role at that level of recursion). Similarly, at the outset of each exercise they were to discuss how to handle the work, (a System Four, Planning, function), the Chairman was then to monitor progress against the plan, alerting the group to any problems and reconvening System Four as necessary. System Five was represented by group decision making, essentially a democratic process. The operational elements were the students themselves and other than the suggestions made about the metasystemic roles the groups were left to be self-organising.

9.4.2.2 System Three

The Lecturer adopted the metasystemic role for the viable classroom. The System Three function consisted of specifying the tasks to be undertaken and agreeing the time constraints with the students as well as delivering necessary information for them to undertake the task. This function also controlled classroom administration such as the breaks for coffee and meals, and adherance to start and finish times of the class, constraints imposed by a higher recursion.

9.4.2.3 System Two

System Two activity consisted of moving between the groups providing technical assistance where necessary to help a group over a particular point, or asking deeper questions when a group was making good progress. Reminders about time constraints were also given to help keep the group on course to finish its task simultaneously with the others.

System Two activity was used deliberately to identify common problems for which explanations were then given, in the System Three role, to the entire class. Local problems were handled within each group.

9.4.2.4 System Three*

The audit activity consisted of visiting each of the groups on a random basis, listening to the ongoing debates and asking questions designed to explore the students understanding.

9.4.2.5 System Four

System Four activity involved monitoring the overall classroom environment and the local press, seeking examples to help elaborate particular points and bringing in experiences to the teaching process from beyond the environments of the students, e.g. other work and writings concerning the Viable System Model, explanations from wider reading, e.g. other organisational models etc.

9.4.2.6 System Five

System Five was represented by the students with the lecturer. All policy decisions at this level of recursion were taken on a consultative basis, the aim being to allow the students to set the ethos for the classroom, albeit within the constraints imposed from the next higher level of recursion, e.g. overall time constraints, course content. Despite these constraints the students, as fee-paying and voluntary members of the system, had ultimate control since they could choose not to turn up for the class, and, without the students there is no need for a lecturer.

The students were also able to determine the final course content taught at classroom level since their enquiries prompted explanations.

9.4.2.7 Communication Channels and Control Loops

There were no formal or physical communication channels or control loops established in this system. The entire set up was based on human interaction and depended on the ability of myself as lecturer to observe and hear what was happening and the ability of the students to establish contact as necessary. Channels sprang into operation naturally both between the metasystem Lecturer and System One and between System One elements. Group members visited other groups and freely exchanged ideas and information.

The Algedonic channel was represented by the level and type of noise generated in the classroom. Silence was taken to signify that there were problems, whilst a high level of happy noise meant everything was OK and a high level of unhappy noise required metasystemic intervention. This approach was found to be very reliable as an indicator of progress and general satisfaction. "Happy" noise was indicated by laughter and good natured debate, whilst "unhappy" noise was indicated by agressive tones and outright argument. The operation of this mechanism depended upon correct discrimination by the receiving system of the signals. (System Three* audits were used to amplify variety when signals were confused or unclear).

The Classroom design is shown as figure 9.12 on the next page.

9.4.3 Practical Work

The worked example undertaken was a conceptual modelling of the organisation of the University of Hull, moving through the complete methodology for using the Viable System Model as crystallised by Flood & Jackson(5). Since the students had little knowledge of the detail of its organisation this exercised their creativity and prompted considerable questioning which allowed explanation of the problem areas. They ended by designing an "idealised University system" according to the various purposes that they imputed to it as observers. These ranged from "a system for providing education" to "a system for employing otherwise unemployable academics" and "a system of education for profit." The purposes chosen reflected the attitudes and expectations of the individual groups and were justified in terms of their perception of the outputs of the System. The second half of the course called for them to diagnose and redesign "Cakes". The task and situation description form Appendix iii to this thesis.

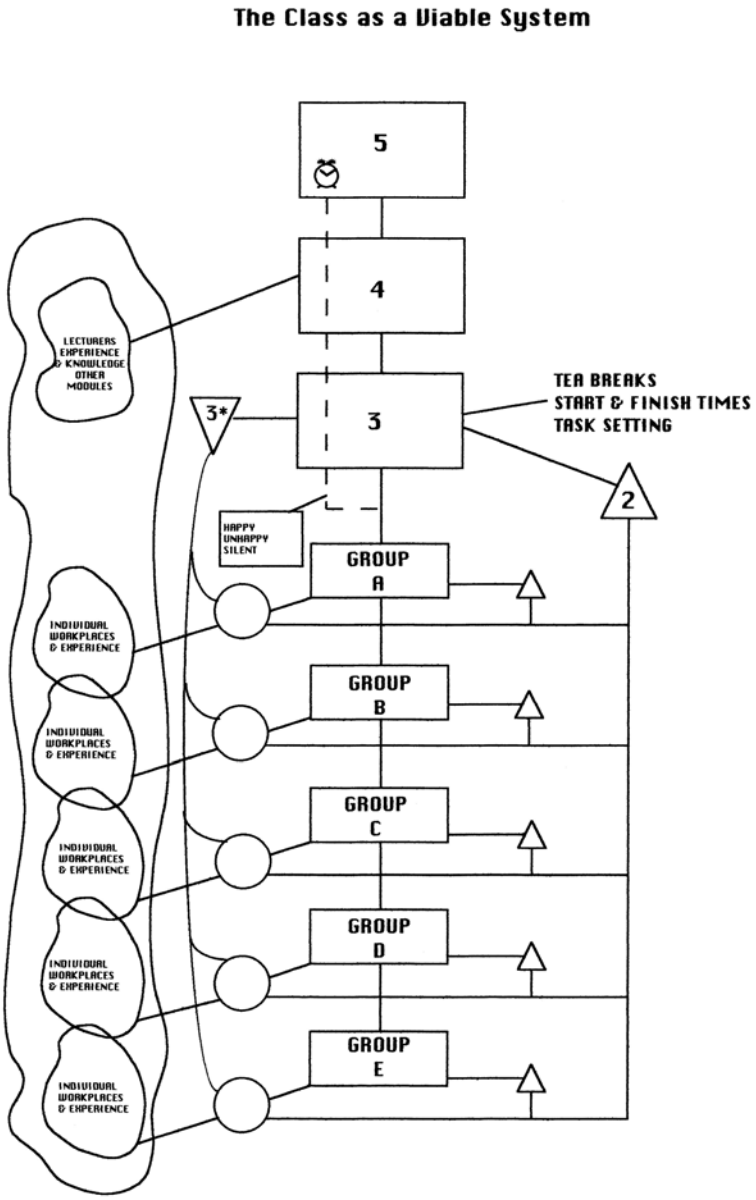

Figure 9.12

331

The Class as a Viable System

Figure 9.12

The results of their diagnosis and redesign were presented in the form of combative presentation in that one group presented its findings whilst the other groups and myself used our own findings as a base for questioning their interpretation. This enabled the further exploration and elaboration of the areas of difficulty.

To elaborate the different findings in full within this thesis would be inappropriate. It must suffice to say that each group proposed redesigns of Cakes which were generally cybernetically sound according to the purposes they had imputed. The diagrams were drawn on flip charts and covered the entire walls of the lecture room. One of these in particular was more than two metres high and around five metres long. The presentations were recorded on video and have been preserved.

9.4.4 Difficult Points

Two major areas of difficulty were experienced by the student with the Viable System Model which are worth exploring here.

9.4.4.1 Role articulation

This problem concerns the understanding of roles within an organisation. The traditional approach to describing organisation is through an organisation chart. This will show each individual occupying a single box and conducting the functions allocated. The Viable System Model represents an account of how the organisation actually works, and as such individuals may fulfil a number of roles within it. This distinction proved to be a great difficulty for the students until explained to them by undertaking a modelling of "myself" as a viable system. This, which is reminiscent of Pask's "P" and "M" individuals,(82) is shown diagramatically in figure 9.13.

The explanation is this.

At Recursion One, there is only one "me", I am capable of learning, adaptation and survival within a specified environment, I am "viable." However, at Recursion Two, I fulfil a number of roles, which, taken together, comprise the "me" which is seen.

There is as a System One element, a physiological "me" which has as its operations all normal human activities, eating, breathing, sleeping etc.. I also have other selves, arbitrarily, the lecturer, the consultant, the researcher, the husband and the father. I never cease being any of these things although at any one time I will be more in one role than any of the others. I co-ordinate these different aspects of "me" through a system of diaries, schedules and budgets both of finance and time; this is my System Two.

My System Three, knows what I am, and controls the allocation of resources to each element of my System One. I sporadically audit my activities in each role, System Three*,to ensure that I know myself and that I am behaving according to my System Three expectations e.g. I weigh myself and know when I am allocating too much of "me" to eating, (or too little to exercise!).

System Four systematically scans my environment, constantly looking for other things that I could be, searching for opportunities for me to become nearer to what System Five, i.e. my soul or my spirit, would like me to be.

My "Self" as a Viable System

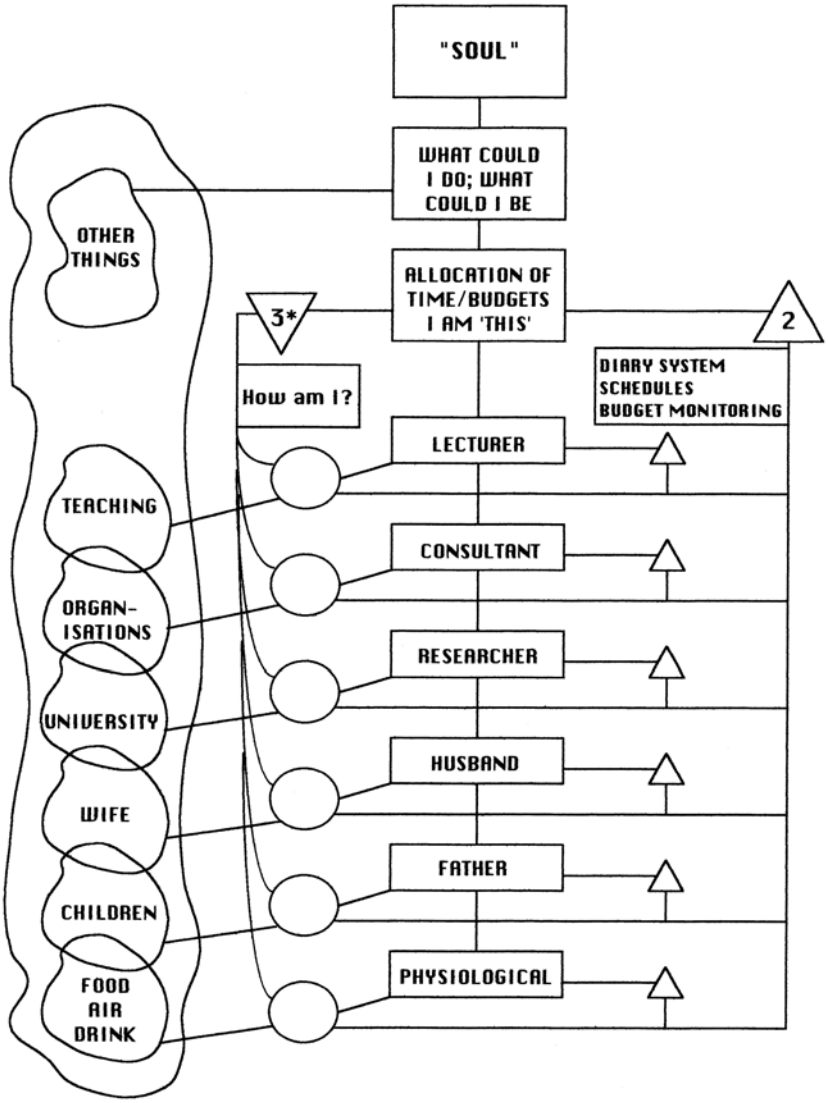

Figure 9.13

334

My "Self" as a Viable System

Figure 9.13

I am therefore one person occupying multiple roles within my "self" as a viable system. I need to know when I am occupying each role in order that my behaviour can be appropriate to that role. In the same way each individual within an organisation may occupy more than one role, it is important that they should recognise this and behave accordingly. A member of System Three, behaving as a member of System One, as is so often the case, may threaten the viability of the whole system.

9.4.4.2 Diagrammatic representation

Despite Beer's protestations that the Viable System Model is not an alternative hierarchy, the diagrams used show the metasystem in a position which appears superior to System One, System Five is at the top of the page, System One at the bottom. This convention did lead students to think about the various systems in this way. It is after all the same presentation as a conventional hierarchy, i.e. he who sits at the top of the chart has the biggest office and makes what are considered to be the broader and more far reaching decisions while he has least knowledge of perceived reality in the sub-systems.

It was proposed to the students that in order to counter this and to more accurately depict the role of the metasystem, the diagram should be turned through 90°. This change of presentation depicts System One as being at the same level of importance as the metasystem. System Two continues to be presented as an anti-oscillation device but acting horizontally rather than vertically. A complete inversion of the diagram was considered to depict the metasystem more accurately in its role of supporting and enabling the activities of System One. However, this then presents System One as more important than the metasystem, whereas the cybernetic and systems argument is that they are fully interdependent none being more important than the others, each fulfilling a distinct and necessary function in achieving viability of the system studied.

It was agreed that the horizontal representation of a single level of recursion alters the perception of the relative importance of the five sub-systems which comprise the Viable System Model. When it is necessary to present more than one level of the model, System Five will always, at some point, be at the top of a recursion.

9.4.5 Summary

It is difficult to comment adequately on the success or otherwise of the approach taken to designing the viable classroom but, standard evaluation forms completed by the students at the end of the course showed a favourable response. All of the Students in the class passed the subsequent examination, (an unusual phenomenon), and a large number are now using the Viable System Model for their MBA projects. Several are known to have returned to their own organisations and developed and implemented changes using the Viable System Model as their guide and inspiration, including an application in the armed forces.

The same approach has been taken to subsequent lecture sessions but the same results have not always been achieved. It is uncertain to what extent this success is influenced by the approach and to what extent by the students, each class being different.

9.5 Conclusion

This chapter has reported three major uses of the Viable System Model in different circumstances. The first, FinCo, changed the orientation and organisation of a very traditional and hierarchical organisation with apparent success on a number of counts, particularly the use of the Senior Management as an Operations Research team. The second, Cakes, was a more explicit use as a diagnostic tool to dissolve

organisational problems in a cake factory. The third, an experiment in classroom organisation for teaching the Viable System Model, while apparently successful on the first occasion has since met with varying degrees of success.

The next chapter will draw lessons learnt from the process of applying the Viable System Model to these various situations and to the Carco project described in Chapter Eight.

Chapter Ten

Theory in Practice

This chapter concludes the second part of this thesis which has reported four experiences of using the Viable System Model. It consolidates the work that has been done, reviews the established theory and past practice, and critically reflects on the case studies to draw out theoretical and practical lessons for further consideration.

10.1 Introduction

The first part of this thesis examined the need for a more adequate model of organisation for contemporary managers. It suggested that Beer's Viable System Model might offer this and also traced the development of cybernetics and that model. This second part has reported a series of applications of the model and is aimed at understanding how it can be used and may be made more accessible. This chapter consolidates the work so far undertaken and critically reflects on the experience of using the Viable System Model to briefly draw out the theoretical and practical lessons.

10.2 Theory Revisited

The Viable System Model is considered to be an observer dependent, general model of organisation, applicable to all sizes and types of organisation and useful in complex-unitary situations. That is, where there is general agreement about the purposes to be pursued, or where such agreement is achievable, and where

many elements exist in close interrelationship, exhibiting purposeful and probabilistic behaviour. The organisation is considered to be in dynamic interaction with its environment.

The Viable System Model has previously been seen as being superior to the dominant models through its recognition of the environment, its concern with adaptation and learning and because it attempts to provide an account of how the organisation works (or should work) rather than providing a device for apportioning blame. It has also been shown that the Viable System Model provides direct assistance in the diagnosis of organisational faults and in subsequent redesign. The principal arguments against the model concern the difficulty of practical application and its simplistic view from an interpretive perspective.

Chapter Five comprehensively reviewed the past reported applications of the model, and demonstrated its use in a variety of situations, highlighting its perceived limitations. The case studies reported in this part of the thesis were aimed at examining the utility, methodology, topography and accessibility of the Viable System Model as a way of thinking about organisations. The following sections of this chapter will briefly examine the studies reported in Chapters 6 - 9, to highlight the apparent strengths and weaknesses of the approach and the consequences for the model.

10.3 Carco

The application of the Viable System Model to Carco was difficult, inhibited by two major factors. Firstly the lack of adequate management knowledge by the participants in the process. Secondly, the need to translate the cybernetic principles and ideas into language accessible to them. Accordingly, a non-technological, people-oriented approach was deliberately taken to the application.

This seemed the most appropriate format in a small family business and provided the opportunity to examine the theoretical criticism that the VSM underplays the purposeful role of individuals in an organisation. In this case the impact of purposeful behaviour, or lack of it, is considered to be a key issue in the outcome of the process.

10.3.1 Strengths

The application undoubtedly had benefits for Carco in a number of areas. Firstly, it enabled a composite view to be taken of the potential consequences of each decision for the whole business, a view not previously available. Secondly, it highlighted inefficient or loss-sustaining areas of the business, bringing these sharply into focus and enabling them to be addressed within the framework of the needs of the organisation as a whole. Thirdly, the importance of effective generation and distribution of meaningful information was recognised and procedures were installed to achieve this. Each of the Managers benefited, being able to make better informed decisions than previously. Fourthly, the impacts of the behaviour of the Franchisor, Hireco and Oilco were recognised for the first time and while Hireco was subsequently excluded by the closure of the Car Hire operation, the representatives of the Franchisor and Oilco were brought into the metasystem of Carco. This inhibited their previous corruption of the system since their expectations became filtered by the metasystem and were modified to meet the expectations and capabilities of Carco as a whole before being transmitted to the relevant System One element. These representatives were treated, as far as possible, as being a part of Carco, rather than as separate from it. Fifthly, the application led to more open communication between the Senior Management of Carco and the Managers of the System One elements, not only through formal reports but through direct discussion that enabled both semantic and syntactic meanings to be conveyed. Sixthly, the importance of understanding and discriminating roles within the organisation was emphasised, such that the

participants came to realise, in particular, the need to separate their System One selves from their metasystem selves and behave accordingly. Finally, the application of the Viable System Model emphasised the importance of the policy making function. It showed clearly how the lack of purposeful behaviour by the Chairman/MD, who personified System Five throughout the study, inhibited the changes necessary for the survival of Carco.

The increase in communication enabled the development of a stronger sense of common purpose and shared goals throughout Carco. The clarification of roles, the definition of limits of authority for each of the Managers, and the development of clearer guidelines and policies for the operation of the business, far from inhibiting the freedom of the Managers was actually considered, by most, to have increased it. Prior to the intervention the lack of rules and policies had constrained the behaviour of most Managers who had felt obliged to refer even minor operating decisions. Other Managers had chosen to subvert the purposes of Carco to their own ends. These were excluded from the revised organisation, their behaviour being unacceptable within the agreed common purpose. The remaining Managers were able to absorb more variety at the lower organisational level as they were now aware of the expectations and limitations of the wider system to which they belonged. The provision of policies and rules, created with their assistance, is considered to have extended the boundaries of their perceived freedom.

10.3.2 Weaknesses

Although the established methodology for using the Viable System Model is precise in advising the user what should be done, it says nothing about how it should be done. This should probably be seen as a weakness of the methodology rather than of the model itself.

No help was provided by the model in achieving the recognition of the purpose of the organisation, nor in communicating that to the participants in the system. This was undertaken by a process of discussion and debate with the participants, the writer acting as a guide to this part of the process. The chosen purpose was theirs, not mine, although my involvement inevitably affected the outcome of the discussions. The identification of purpose is perhaps a function which is beyond the capabilities of the Viable System Model itself and of the established methodology, requiring the adoption of some other approach. It can, however, prove useful in the event of a disagreement about purpose, to undertake a number of modellings for different assumed purposes and allow the participants to assess their implications.

The Viable System Model has a limitation in use at the fine detail level of examination. It does not help with the specification of individual tasks and jobs, a facility that can be obtained within the "machine" model of organisation, particularly in the use of work measurement techniques. At that level of analysis the approaches should perhaps be considered as complementary and not alternative.

While, in the case of Carco, the intervention was consciously structured to take account of, and maximise, the purposeful role of the people in the organisation, this is not a requirement of the methodology, nor is it explicit in the model itself. The lack of purposeful behaviour by the Chairman/MD was a major factor in the outcome of the intervention and the model provided no significant help in countering this. It was useful in explaining to him the need for action and the justification for proposals made. It could not however make any decision for him.

The language of cybernetics, and that of the Viable System Model, can be considered as reducing its accessibility to managers. The model, its concepts and principles are expressed in the language of management scientists, and, while this language has a precision of meaning and descriptive power for us, it merely

serves to obscure the meaning for those unfamiliar with it. It was therefore necessary to undertake much of the work in the language of the system studied and not that of the model. It is inevitable that there was a compromise in this case between a clean, technical application of the model and the practical nature of the work in that environment. Whilst there may be some loss of potential utility through this approach, there still remain the strengths outlined above.

10.3.3 Consequences for the Model

10.3.3.1 Utility

The application has shown that the Viable System Model can be used in a non-technological manner, taking account of the purposeful behaviour of individuals, and where there is a narrow base of management knowledge. The difficulty of application, often considered to arise from resistance to change provoked within the organisation, was overcome in three ways. Firstly, by expressing the model in the language of the system studied, secondly by close involvement of the people affected by the application in both the identification and resolution of difficulties, thirdly by helping them to explore and comprehend the benefits of this approach. It is undoubtedly the case that the application was helped by the clear desire of the majority of participants to improve a situation which threatened their livelihood and security at a time of rising unemployment and of high inflation in the wider environment. The difficulty of application can, perhaps, be overcome by this people-oriented approach.

10.3.3.2 Ideology

The principal ideological concern with the Viable System Model is the perceived danger of autocratic abuse and control over individual freedom. Section 10.3.1

showed how freedom was perceived to have increased at Carco as a result of the creation of rules and policies in conjunction with the people affected. These attempted to limit behaviour to actions supportive of the systems purpose. Whilst this shows that the Viable System Model need not be used in an autocratic way it does not mean that the cybernetic tools cannot be used that way.

The Viable System Model, though, is considered to be useful where there is, or is achievable, a general agreement amongst the stakeholders about the purpose of the system. If this is not present, then the model cannot be useful since modelling subsequent to the definition of purpose depends upon that agreement. An organisation designed in accordance with the principles of the Viable System Model, cannot itself be autocratic. If the requirement for the minimum degree of control over individual freedom necessary to maintain systemic cohesion is not met, then the system is not designed to meet the criteria of viability. Maintenance of cohesion in these circumstances can only be achieved by "policing" the system and punishing transgressions. This could be expected to lead to subversion of the system by stakeholders perceiving different purposes, thus reducing efficiency and effectiveness in direct contradiction of the aims of the model.

10.3.3.3 Theory

While the Viable System Model can be held to give only a partial view of an organisation, the Carco study showed how the attributes of the participants in the study were taken into account and how they contributed to the development of the interventions. A pure application of the model could, in theory, ignore these aspects but this is not possible at the practical level; they must be acknowledged and worked with. An example has already been given in the behaviour of the Chairman/MD. The model provided no help in resolving the difficulty which was, eventually, overcome by the intervention of external agencies and decisions being forced upon him.

10.3.3.4 Methodology

The work so far undertaken suggests a need for further refinement of the methodology of using the Viable System Model to more accurately reflect its principles. Firstly, using the model perhaps needs to be considered as an interactive process of learning to manage differently, through learning and experimentation rather than historical precedent. Secondly, the importance of the stakeholders within the system needs to be emphasised, both in terms of their purposeful behaviour, and, in their contribution to the definition of the purpose of the system. Finally, to increase effective communication, perhaps the model should be expressed in the language of the subject system rather than in its own terms.

10.4 Finco

The application of the Viable System Model at Finco was implicit rather than explicit, the principles and concepts were used and discussed, but the model was never fully elaborated to the participants. This approach was taken to avoid alienating the participants and enabled the model to be used as a way of "thinking about organisation." This way of thinking was applied both to the management of the project and to the redesign of the organisation itself. As suggested in section 10.3.3.4, this was a process of learning to manage differently. Established boundaries and norms of behaviour were modified in heuristic progress towards the goal of becoming a financial institution meeting the needs of all of its stakeholders, who were considered to be the customers, staff and owners of the organisation. As with Carco, the organisation and the project were regarded by me as belonging to the participants. It was their organisation, and, for any long term benefit to be felt, they had to own the reorganisation as well. This emphasises again the impact of the purposeful behaviour of people, both in determining how the system functions and in redesigning it to function differently.

The language used was predominantly that of Finco. Cybernetic language was translated into those terms as far as possible. Technological development was inhibited by the constraints of belonging to Finco as a whole which centrally determined the availability and content of many reports, and prevented the development of some local initiatives. The way in which reports were used and interpreted was not constrained in this way and advantage was taken of this aspect.

10.4.1 Strengths

Key changes were seen in the understanding of the organisation, not as a network of offices with undifferentiated customers which was the traditional view, but as an organisation structured to match the needs of its customers which used those offices as its physical manifestation. This led to the redevelopment of the organisation into the four operating elements defined at Recursion One.

Major benefits were obtained in challenging the bureaucracy of the organisation from the ideas of purposeful and supportive activity. Purposeful behaviour was seen as that which fulfilled the given purposes of the organisation, supportive being that which enabled the purposeful activity to be carried out. These very different attributes had previously been closely intertwined throughout the organisation, with supposedly supportive activity becoming dominant at the higher organisational levels. Questioning function, nature and necessity of much of the control activity played a major part in freeing people to engage in productive behaviour which appears to have been responsible to some degree for the increase in profit revealed at the end of the period after the changes. A number of activities ceased and others were allocated lower priority than had been the case. This experience also counters the criticism that use of the Viable System Model leads to autocratic, rigid, institutionalised change after application.

The use of the Senior Management team as an "operations research" group was of particular benefit. Firstly, their knowledge of the organisation, its people, systems and procedures significantly enriched the development process, increasing the capacity to absorb variety by amplifying the variety of the project model. Secondly, since they were fully involved in the derivation of the outcomes, they were fully committed to their successful implementation. Thirdly, their direct involvement enhanced their understanding of the need for an effective metasystem and the different roles which they each needed to fulfil.

At Recursion Two, where the self-organising matrix was developed, control activity was almost abolished. The autonomy granted to each individual to be responsible for the conduct of his or her duties was supported by audit activity and the creation of the mentoring system that enabled emergent problems to be addressed. Each of these staff seemed to gain greater satisfaction from this maximisation of autonomy, being trusted rather than closely controlled. The satisfactory operation of the system was allowed to depend on their co-operation and interaction rather than on formal procedures.

This approach highlighted a number of inadequacies in the original organisation design; a mismatch between the skills and operational capabilities of the Managers and the needs of the customers; a lack of any effective metasystem; poor communication; the internal focus, and, a level of oscillation arising from competition for customers occurring between offices. Once identified these areas were not difficult to address and resolve.

10.4.2 Weaknesses

The implicit rather than explicit use of the Viable System Model inevitably reduced the level of understanding which the participants in the project obtained. Nonetheless the underlying logic of the model was used and conclusions derived from it were generally accepted.

Resistance was met from certain individuals who saw that their perceived status within the organisation would fall as a result of the reorganisation, either through a reduction in direct power or through changes in the relative importance of roles. The model provided no assistance in overcoming these difficulties which were addressed on an individual basis by the writer with varying degrees of success. The political nature of these difficulties and the nature of the organisation as a whole meant that some compromises were necessary. These were fortunately few, and, if a proposed compromise threatened the success of the project, negotiations continued until it could be brought within the desired framework. No decisions or changes were imposed, albeit some of the agreements were achieved only reluctantly.

A particular example of this is the Manager, Large Corporate. The original organisation chart showed this individual as hierarchically superior to all but the Chief Manager. He saw himself as the "number two" for the Group, a position which he had occupied for some years. The reorganisation, derived from modelling according to the Viable System Model, revised this individual's role such that he became "number one" for the large corporate element. While in the absence of the Chief Manager he would, as the next most senior officer, be expected to deputise, his prime role was the management of his own unit. The managers of the other System One elements were expected to manage without his help. On the revised organisation chart, all System One Managers were shown as being at the same hierarchical level. This reflected the way the group was now organised rather than the grades and seniority of individuals within it. This difficulty of perceived status was eventually overcome through both re-

examining with him the benefits of the changes in helping him to achieve his objectives and reassurance of the acknowledgement of his seniority.

This is again an aspect of organisation which the Viable System Model and established methodology do not address, the logic and rationality of the model cannot overcome illogical forms of behaviour based on human desires and expectations.

10.4.3 Consequences for the model

10.4.3.1 Utility

This application has again shown how successful use of the Viable System Model does not depend upon the application of technology. The project emphasised the purposeful behaviour of the individuals, explicitly recognised that it was their system and used the cybernetic concepts to inform their decision making. This approach is considered to have substantially helped to overcome the difficulties of using the model.

The application demonstrates the use of the model as a guide to managing the process of change, interlocking the "project system," which needed to be viable itself, with the "subject system" which was seeking viability. The "subject system" was the Group, the "project system" the activities aimed at reorganising the group, these systems had some separate members and some common members. The participants learned that they could utilise their skills to reorganise Finco, and, by structured reflection on the outcomes of their decisions, learned different forms of behaviour; making different decisions, and making decisions differently.

10.4.3.2 Ideology

The concern with potential autocratic abuse arising through application of the Viable System Model has already been raised. This people-oriented application has again shown how freedom can also be created. Prior to the project the Staff at Finco were constrained in their behaviour by the established norms, values and expectations of the organisation. They had been taught that they had no power to change the way the organisation worked and that Head Office had all the solutions. This did not stop them believing that there were faults. The project provided the opportunity for them to address their concerns while having the support of an expert who was able both to guide them through the process, and, to some degree, protect them from external interference, this created the freedom for them to learn.

The greatest legacy of the project is perhaps not the organisational changes which were made as they will become less relevant through the passage of time and as the environment of Finco itself changes. The real legacy is that those individuals have learnt that they can, to some degree, change the organisation, that they have the skill and can grasp the opportunity.

10.4.3.3 Theory

The application of the Viable System Model highlights the impact of the behaviour of individuals on the process of intervention. The project worked in the way that it did because of the personal approach of the Regional Manager, his willingness to change and his desire to involve the staff in the process. As with Carco, the influence of this key individual on the process cannot be overstated, although the attributes of the individuals could not have been less alike. Had he been instructed to change, rather than being a keen volunteer, the process and the outcome would surely have been different.

10.4.3.4 Methodology

This study again emphasises the need for the methodology to be further developed. Firstly, the participants in the system need to be explicitly incorporated in the process. Secondly, although the purpose of the system was given in this case, a mechanism needs to be established whereby it can be effectively shared and agreed. Finally, the project shows that the use of the model for problem solving intervention is perhaps not sufficient since that only enables an immediate change. The model and methodology need to become an embedded way of thinking about the organisation so that the process of learning and adaptation becomes an integral part of the process of management.

10.5 Cakes

The explicit use of the Viable System Model at Cakes was intended to increase the viability of the organisation both financially and organisationally after a considerable period of neglect by its owners. The purpose of Cakes was given in this case by its owners and this purpose was accepted by those participating in the project. The project was undertaken through a series of purposeful conversations with the participants, singly, in groups and in both formal and informal settings. The aim of the conversations was to draw out from the participants their descriptions of the then prevailing situation. These descriptions, which conveyed differing perceptions of the organisation's reality, were compared with the ideal organisation proposed by the Viable System Model, the redesign being the product of the conversation. This may be seen as a means of enabling the participant, whose view must be subjective, to be an observer of his or her own situation.

The process was inhibited to some degree by the language of the model, which had to be explained in that of Cake's staff. A further limitation of the study was the

short time scale available for achievement of an outcome which would be seen as productive by the Company. The model was helpful in this regard, its speed and economy of use being suited to a situation calling for a fast response. A final difficulty was the inevitability of some job losses at Cakes as one outcome of the process, a factor of which all parties were aware at the outset. This did cause some difficulties with communication and participation although these were largely overcome.

10.5.1 Strengths

The application showed considerable benefit for Cakes. The efficiency and effectiveness of the factory were improved, purposeful communication increased, and subsequently the industrial relations climate has been calmer overall. The organisation changes and job losses caused some initial disharmony but the Management made clear its intention to maintain and develop the Factory and to preserve employment for the majority in the longer term. This intention had been in doubt for some time prior to the intervention and the uncertainty had been a factor in the previously militant attitude of the Union whose members were involved in the process.

The holistic modelling of Cakes provided, possibly for the first time, an understanding of the interrelationship of its various units. This systemic view enabled production to be seen, not as a series of discrete and separate activities to be managed separately, but, as a continuous process which needed to be managed as a whole. Further benefit was gained from the development in understanding of the roles both of individuals within the organisation and of the supporting departments. People were enabled to understand the contribution which they made to the organisation and to its success or failure, something which had not previously been possible. The understanding of the roles of the supporting departments, outlined in the normative statement of Management

Philosophy, had considerable benefits. Firstly, it served to focus the attention of the staff in these areas on their purpose in the organisation, raising awareness that, while all units were interdependent, if the purpose of the system could not be fulfilled, then it would not survive, and it was their task to enable purposeful activity. Secondly, it enabled meaningful discussion of the costs of those departments in terms of the service standards that needed to be provided to the operational elements and other sub-systems. Finally, it should enable the development of a measurement procedure for monitoring their performance in terms of the services provided. This suggests that a meaningful bargain may be achieved for the resources absorbed by these areas.

The normative statement of Management Philosophy was beneficial in helping to establish a new ethos for Cakes. The management publicly described for the first time their view of how they intended to manage the factory, not exposing themselves to a democratic process, but certainly opening themselves to accusations of bad faith, and probably Union pressure if they failed to work according to their declaration.

Finally, the speed of application of the model is stressed. The project was undertaken, from initial visit to reported proposals in four weeks, and the only external agent involved was the writer. All 93 staff receiving Supervisory or Management pay scales were involved in the intervention to varying degrees. Some were not interested, others became very actively involved, but all views were sought and taken into account although not all suggestions could be included in the redesign.

10.5.2 Weaknesses

The principal weakness revealed in the Viable System Model through this intervention was its inability to provide help with the human aspects.

The Cakes intervention required that commercial interest in reduced costs outweighed human interest in preserving employment. Although after the intervention the selection of certain staff for redundancy was undertaken in a humane way, seeking for volunteers and those who had expressed a desire to leave, this did not help during the process to reduce uncertainty and concern that a number of staff felt about their future livelihood. The Viable System Model, and its methodology, provide no help with this very personal aspect of intervention.

Similarly, the attitudes of certain individuals whose comfortable niches within the organisation were threatened by the intervention, could not be changed through the model. No change was achieved with some staff, while others, after considerable debate, became actively involved in the process.

This intervention shows again the need for the behaviour of individuals to be taken into explicit account in the methodology for using the Viable System Model. A need for the development of shared purpose is also suggested by this study. Although some people were not contributing to the stated purpose of the organisation, they were, apparently, personally fulfilled by the pursuit of a different purpose within the system being studied. Its redesign led either to their future unemployment, or to imposed change of their purpose to fit within that of Cakes as a whole, causing discomfort and dismay. This was not a democratic context, the individuals concerned could not change the purpose of the system, they either had to conform or leave. This imposed choice, while perhaps justifiable from a meta-level that can observe and adhere to the overall needs of the system, cannot be adequately justified at the level concerned. An explanation to one individual that the continuation of his behaviour threatens the cohesion or possibly survival of the system as a whole may not be accepted unless it can be demonstrated from his or her perspective on the organisation.

10.5.3 Consequences for the Model

10.5.3.1 Utility

This application has demonstrated the speed of application of the Viable System Model in diagnosing and redesigning an organisation. This was achieved through the inherent economy of a design that is identical for every recursion, and, since it attempts to provide an account of how the organisation works, quickly reveals flaws in the present situation. The changes then necessary are largely self-evident.

The difficulty of application, highlighted as a weakness of the model, while largely overcome in this case, was highlighted by the attitudes of some of those affected. This perhaps shows that what may be seen by one person as logical and commercial necessity, may easily be perceived by another as autocratic abuse.

10.5.3.2 Ideology

This point has been introduced in the last part of 10.5.3.1 above. If the stated purpose of a system does not have the agreement of all parties affected by changes to the system then, what one observer defines as necessary for survival or cohesion, another may perceive as autocratic abuse.

10.5.3.3 Theory

This intervention shows again how the purposeful behaviour of individuals must be taken into account in an intervention, and the necessity for purpose to be agreed by all participants. While this may be achievable in a fully democratic context, I suggest it will always remain an unachievable ideal in a commercial organisation where different purposes are imputed by different observers. In this context the purpose of the organisation may be an end in itself for some, while it is a means to an end for others.

10.5.3.4 Methodology

This application again shows the need for further development of the methodology. It suggests that a more detailed and explicit examination of the supportive activity of metasystem constituents should be undertaken. This should not focus simply on how System One is controlled and monitored and the nature of the relationship between System Three and System One. It should also consider how well System Three fulfils its supportive role to System One's purposeful activity, and how responsibility and accountability are exercised for the resources which System Three absorbs at that level of recursion. This may have two principal benefits.

Firstly, this process of self-examination can serve to increase variety absorption at the lower level of recursion, relieving the metasystem of further work. Secondly, since the intervention should preferably be carried out at the highest practical level of recursion - the Corporate level in a commercial situation - this may be the sole opportunity for such an examination.

If the five sub-systems in a Viable System are considered to be mutually interdependent, none being "more equal than the others," and System One is to be held accountable to the metasystem for the resources that it employs, then the metasystem should be able to demonstrate to System One that it only utilises

such resources as are necessary to ensure continuation of the System whose identity System Five represents to the wider system. A requirement such as this would also help to safeguard the system against the dangers of autocratic abuse and pathologically autopoietic behaviour.

The inclusion of these steps in the intervention process would call for a more detailed elaboration of the resource and accountability channels at the metalevel than is in general currently reported.

10.6 Teaching Viability

This explicit use of the Viable System Model to enable learning about it may be considered as similar to the approach adopted at Finco, where the process of using the model to redesign the organisation incorporated cybernetic processes aimed at reflecting on the results achieved and so enabling further learning and adaptation to take place. This was considered to have embedded the model in the organisation. The classroom situation had no other purpose than to teach the students about the model with the intention of changing their way of thinking about organisation.

10.6.1 Strengths

The study shows firstly, how the understanding of organisational cybernetics can be consciously used to structure a situation such that students may learn for themselves and from each other, a process of self-learning and enquiry within a systematic process of teaching and guided by the established methodology for using the Viable System Model. Secondly, the variety reduction inherent in a team or group situation can be demonstrated, provided the group is prepared to organise itself to achieve its given objective. Thirdly, the study shows how the model may be used in a conceptual, as opposed to a formal, organisation, without

technology and relying solely on human interaction and communication. Finally, the study shows how, through the process of debate and discussion, a fuller meaning and understanding can be gained by all involved, conditional upon a willingness to listen and learn on the part of the students.

10.6.2 Weaknesses

The study highlighted weaknesses, not perhaps of the Viable System Model itself but in its methodology and presentation. Firstly, unlike the machine model of organisation, the Viable System Model recognises that individuals may fulfil more than one role, and in more than one function within an organisation. This is not explicitly considered in the methodology. Secondly, the diagrammatic representation with System Five shown at the top of the chart conveys an impression to the student that is difficult to correct through a written description. This may be responsible, in part, for the accusation that the Viable System Model is an alternative hierarchy. Although it may be interpreted in this way, such an interpretation inevitably loses some of the apparent intentions of Stafford Beer.

10.6.3 Consequences for the Model

10.6.3.1 Utility

This case showed how the Viable System Model could be deliberately used in practice to create freedom for the students. They shared the purpose of the system, and perhaps since the only apparent loser of power was the writer, no resistance was met in the particular case to that approach to classroom organisation.

10.6.3.2 Ideology

It can be considered that the style of classroom organisation freed the students from potential autocratic abuse. Rather than being compelled by the custom of the classroom to sit and listen collectively to lectures they were largely freed to interact and learn individually, from and through each other, as well as from me.

10.6.3.3 Theory

This application emphasised the purposeful behaviour of the participants, whilst installing and maintaining a viable organisation structure. The system was dependent on the human qualities of the students, in particular their ability to interact harmoniously with each other.

10.6.3.4 Methodology

This study has demonstrated the need for change and further development of the methodology for using the model. Firstly, the examination of the roles of individuals needs to be made explicit, both as a means of accounting for their purposeful behaviour, and, to ensure that the roles are fully articulated in any redesign of tasks and in the individuals understanding of them. Some of the benefit of the approach will be lost if participants in a study remain convinced that they can not fulfil more than one role in any organisation. Secondly the diagrammatic representation of the model should be changed so that the system-in-focus is drawn horizontally rather than vertically. This is seen as necessary to change the perception of the observer.

10.7 Conclusion

This chapter has outlined the principal lessons learned from the four case studies and identified a number of common themes for further consideration. These will be further developed and elaborated in the next Chapter which will also reconsider the cases for and against the Viable System Model.

Chapter Eleven

Critical Reflections

This chapter uses a SWOT (strengths, weaknesses, opportunities and threats) approach to provide a critical framework to review the various organisational models. The Viable System Model is compared with the mainstream models and its greater utility demonstrated. The second part of the chapter reflects on the lessons learned, emphasising the contribution to knowledge. The section will consider the theory, utility, ideology and methodology of the model, proposing additions and adaptations to the methodology and ways in which the model can be made more accessible.

> "One can take a perfect photograph of anything from a dustbin to a daisy, but the subject is infinitely more important than the photographic technique."(83)

11.1 Introduction

The initial argument of this thesis is that the increasing complexity and rate of change of the world demand a richer, more adequate organisational model than those which are currently dominant. It is proposed that the Viable System view is more adequate than the machine and organic views represented respectively by the Traditional or Rational Model, the Human Relations Model and the Systems Model. The next section will compare the three models.

11.2 Comparison of the Models

11.2.1 Strengths

The machine view of organisation has strength in the systematic analysis of tasks. Practical application of the approach has over a significant period yielded benefit in the efficiency and effectiveness of many types of organisation. The view also assists in the activity of organisation, creating structures for their control and management. It is of particular benefit when an organisation needs to be precise or exact in operation, i.e. those where the absence of precise rules may generate failure or danger to mankind.

The simplicity of the model makes it easily accessible as a tool for all managers who, unfortunately but necessarily, work with an abstraction from the full richness of the originator's understanding. One example of this is the way that Fayol's principle of centralisation, which he saw as being a question of continuously varying proportion - an appropriate balance, has frequently been understood as a call for full centralisation.

The view of the organisation as organic is represented by the Human Relations and Systems view. The first of these has as its greatest strength the recognition of the importance of the human element in organisations. It recognises that people are individuals with different needs and aspirations, although it is often forgotten that these may be met by activity outside the workplace.

The Systems view acknowledges that organisations are composed of a number of interrelated parts, and interact with the environment in which they are contained. The holistic approach requires that all aspects of the system of interest be taken into account by management, a major advance over the models already mentioned.

The Viable System Model, represents the neurocybernetic or brain view of organisation. It shares with the systems view the holistic approach to organisation and its recognition of interaction with the environment. Similarly, the model shares with the machine view the ability to systematically derive order from chaos, although its systemic nature ensures that, unlike the machine model, the whole organisation is kept in view. The Viable System Model, with the Human Relations model, also enables the purposeful behaviour of individuals to be taken into consideration. The model encourages dynamic behaviour by the system studied, enabling processes to be developed for learning and adaptation. As a diagnostic tool, the Viable System Model offers precise help with the diagnosis and rectification of organisational faults whilst assisting with the design of organisation structure and enabling measurement of the success of changes made.

The general applicability of the Viable System Model has been demonstrated through the literature review in Chapter Five and emphasised by the organisation case studies reported in Chapters Eight and Nine. Following these studies a number of points can be added to the strengths of the model. These will be further elaborated in the second part of this chapter.

Firstly, the concepts of purposeful and enabling activity, coupled to performance measurement and resource accountability for enabling functions may serve to break down bureaucracy in an organisation. Activity which is becoming pathologically autopoietic can be recognised and supporting departments can be refocused on the role which the survival of the system demands of them.

Secondly, the model can provide a guide to the development of self regulating organisations in which hierarchical control may be replaced by self control. This has been seen to have both human and financial benefits.

Thirdly, the Viable System Model enables the explanation and articulation of the number of roles played within an organisation by a single individual. This may be compared with the machine view which places each individual within a single box on an organisation chart and treats that position as describing his function and role in the organisation.

Fourthly, the model can be used in conjunction with other frameworks of thought. Flood & Jackson(5) have provided a meta-methodology, Total Systems Intervention which enables different views of the characteristics of an organisation to be taken in a complementary manner. At a subordinate level, once an organisation has been diagnosed through the Viable System Model, there remains a role for activities such as work measurement, procedure review, ergonomics and other areas of management science. Used within the context of a holistic approach to problem solving, with an agreed organisational purpose, the value of these approaches may be enhanced. The enhancement arises since the detailed redesign using, say procedure review, can be undertaken in a manner which fits within the overall design of the organisation rather than in an isolated way. This should serve to avoid the ever more efficient pursuit of ends which are either not purposeful or are misguided.

Finally, the utility of the model as a guide for the process of managing, rather than simply as an abstract tool has been shown.

11.2.2 Weaknesses

The weaknesses of the machine view stem, in part, from the assumptions underpinning it outlined in section 2.3.5 (Page 26). The machine view may be characterised as leading to the development of organisations which are, static, bureaucratic, reductionist, isolationist, hierarchical and dehumanising. These attributes may be regarded as unlikely to be of assistance to contemporary

managers faced with increasing organisational complexity and environmental turbulence. Finally as a model for Managers, while the machine view may enable the identification of problems it offers little specific help with their resolution.

The weaknesses of the Human Relations view are, the common assumption that people's needs must be met at work, that it does not allow for the supremacy of the needs of the organisation over those of its people, and it provides no help with the design and structure of organisations and their environmental interactions.

The Systems view accepts survival as the primary goal of the organisation, effectively ignoring the goal oriented activity of the human actors. It also does not recognise the contribution of these people to the adaptations and changes of the system. Finally, no measurement for cohesion or achievement of goals exists and solutions to problems are vague and untested.

The weaknesses of the neurocybernetic or brain view of organisation were elaborated in Chapter Five as being its simplistic view from an interpretive perspective, the consideration that it underplays the purposeful role of individuals, the danger of autocratic abuse and the difficulty of practical application. These weaknesses will now be reviewed.

Firstly, it can be seen from the Carco, Finco and Cakes applications that the model is easier to apply in practice when the intervention is conducted, as far as possible, in the language of the system studied, and, when the stakeholders in the enterprise are directly involved in the development of solutions to the perceived problems. This development of their understanding reduces resistance to the changes derived and seems to promote a sense of ownership of the changes amongst those stakeholders. This in turn facilitates implementation of those changes.

Secondly, since this view must be considered as only one possible way of looking at organisations then it will inevitably be either simplistic or complexifying from other perspectives, e.g. the machine view would see the Viable System Model as too complex. It can be argued, though, that the richness of the model is dependent upon the extent of its elaboration in any particular case. It has already been suggested that a number of different modellings of any system may be undertaken in order to derive a most useful chain of systems with which to work. Similarly, a number of modellings of the system-in-focus may be undertaken, each from a different perspective on the purpose of the system and to model different aspects of it. For example, any one manufacturing organisation could be modelled as a production system, a quality system, or an employment system, or indeed as all three. The choice is a function of the observer, the observed, and, the purpose of study.

Thirdly, the purposeful behaviour of individuals was deliberately taken into account in the studies undertaken. The contribution which this made to developing and implementing change in the organisations cannot be overstated but the problem of underplay lies not with the model, which provides an account of how the organisation works, but with the methodology for its use. The second part of this chapter will propose a revision to the established methodology to try to take account of this aspect.

Finally, the perceived danger of autocratic abuse can now be denied. It is undoubtedly true that the cybernetic insight to communication and control in organisations, taken together with the cybernetic tools, may be applied in an autocratic manner, and, this was acknowledged by Wiener[16 PG 38] at the birth of the science. However, this is untrue in a rigorous application of the Viable System Model. Such an application requires adherence to both its practice and its principles. An autocratic use would not be an application of the model but of a corruption of it. It would not adhere to the principles since it would require greater constraint on the operational elements than necessary to maintain cohesion and

System Five would not share its identity with System One, a fundamental requirement. The adaptations to the methodology proposed later in the chapter aim to minimise this risk of corruption.

11.2.3 Opportunities and Threats

The machine view of organisation maintains its position of enabling improvements in the performance of parts of organisations. However, the reductionist view which it takes, in conjunction with the flaws in its underlying assumptions limits its utility. While it can continue to contribute to the economic efficiency and effectiveness of the operations of many organisations it will equally serve to ensure that the extensive bureaucratic and hierarchical structures necessary to maintain such organisations are continued. These structures may be considered to absorb resources of all kinds which could be put to more effective use in the service of mankind.

Adherence to the machine view inhibits the ability to consider, from a societary perspective, the roles and functioning of both private and public institutions. Their apparent purpose having been given at the outset, they will continue to fail in their objectives since they have no mechanism for recognising failure and no means of adaptation. An example of this could be the Social Security system in the UK. The Government, through the Department of Social Security, seems to be pursuing more efficient means of delivering funds to those in need of support, rather than trying to find ways of reducing the number of those in such need. This approach ensures that fundamental problems will never be addressed. The reductionist approach ensures that the purpose of the whole system can not be questioned or explored.

The organic view of organisation, represented by the Human Relations and Systems models, can enable the interaction of parts, and of the organisation with

the environment to be considered. However, neither provides any substantial guidance on developing solutions, and the predominant concern in the Human Relations model with the needs and desires of individuals ignores the needs and desires of organisations, or society as a whole. The development of this model has undoubtedly been an emancipatory phenomenon, encouraging the recognition of individual capabilities and expectations. However, the respect that the model suggests we should have for any individuals rights must be accompanied by his or her responsibility to accept ours, and to act accordingly. There are no rights without responsibility, either for ourselves or for others.

The models provide no help with the redesign of organisations, and so offer nothing specific towards the problem of organisation outlined in Chapter One. That is not to say that the models are useless. They offer specific guidance on the treatment of humans and their contribution to the organisation. This contribution needs to be incorporated as part of the methodology for any model which is to serve human and technical interests.

The neurocybernetic, or brain view of organisation appears to offer a major opportunity through the Viable System Model. Since the model has been developed and applied in numerous organisations over twenty five years, it offers not simply a framework for criticising existing organisation but a tested alternative. Its limitations in use are known, and the benefits of its application can be reviewed. The model can be used with considerable confidence. It provides the opportunity to re-examine the functioning of organisations with a view to minimising the use of resources in pursuit of their objectives. Successful application of the model need not simply lead to more efficient organisations but to a new framework of thought for managers. A framework which accepts uncertainty and plans for change, rather than one which emphasises management of yesterday's problems.

Perhaps the biggest opportunity for the model rests in the political and economic changes which are occurring throughout the world. The collapse of the Union of

Soviet Socialist Republics, the progressive opening of China, and the increasing industrialisation throughout Asia demand that changes are made in the way Western organisations are managed, if only in order to ensure their economic survival in the face of new competition. At the same time, the emergent nations and economies will look to the Western model for guidance on how to manage their organisations. If we do not want them to make the same mistakes as us, we should ensure that they are offered the most adequate model at our disposal, the Viable System Model. The danger is that if we do not reform our organisations, they, and consequently our societies, will not survive - they have been breaking down for some years already. If the emergent nations model their organisations on ours which are failing, they will ensure not long term survival, but will institutionalise failure since it will be built in to the system.

Finally, the contemporary world of management has become obsessed with Management Information Systems, the underlying assumption being that Managers need more information than they currently receive. Beer has written about the expense of these systems criticising their failure, and much has been written by others about what has become known as "information overload." Many expensively designed and implemented information systems fail since little or no account is taken of the users. Large sums are expended on hardware and software to generate outputs with little regard given to what is generated, who receives it, how it is used (if at all), and what information is conveyed. The computer systems at Carco, Chapter Eight, were a good example.

The Viable System Model gives the opportunity to address the real need. This seems not to be for Management Information Systems, but, for systems of information management. Use of the Viable System Model enables an examination of the information needs of an organisation and, by design rather than accident helps to develop a system where:-

- the right information.
- is in the right place.
- at the right time.
- for the right purpose.
- in the right language and context.

Effective use of the model will help to ensure that superfluous data (noise) is minimised - only relevant information being transmitted within the system and in its exchanges with the environment. Environmental scanning can be carried out such that irrelevant material can be excluded. This will help to reduce information overload and on these grounds if no other the Viable System Model must add value to the practice of management.

11.2.4 Summary

This section has compared the Viable System Model with the dominant models of organisation and its superiority has been demonstrated. Application of the Viable System Model will more adequately enable managers to deal with the increasing complexity of contemporary organisations in their environments.

11.3 Reflections on the Model

The cybernetic approach exhibited by the model has been demonstrated as more adequate than the currently dominant models, and it has been suggested that the value of these latter approaches, and their tools, can be enhanced by their use in a way complementary to the holistic view. This section of the chapter will reflect on four principal aspects of the Viable System Model; its theory, ideology, utility and methodology.

11.3.1 Theory

The principal theoretical criticism of the Viable System Model is that in emphasising communication and control processes it neglects social processes and underplays purposeful behaviour by individuals. Social processes and purposeful behaviour may be seen as aspects of communication and control, particularly in smaller or less formal organisations such as Carco and in the classroom. None of the mechanisms of control or sub-systems required by the model need to exist in a hard physical sense, they may simply be ways of thinking about organisation, and as in the classroom case study may be made implicit in behaviour. These soft aspects may still be modelled through the Viable System Model as demonstrated in Chapters Eight and Nine.

The second aspect of this is the purposeful behaviour of individuals. Whilst the original model does not specifically take account of this it may be because its logic is bounded by the neurophysiological analogy used to describe it in "Brain of the Firm." The model requires that System Five supplies logical closure to the system, acting to absorb all residual variety in terms of achievement of the systems purpose. It is therefore complete; every question can be answered.

In a social system, which depends for its cohesion on the willingness of its constituents to belong, whether in a nation or a firm, this is not enough. In this case, maintenance of cohesion depends both, on the ability of System One to meet the expectations of the metasystem, and, that of the metasystem to meet the expectations of the people who constitute System One. Only if this is done will the system be truly viable, minimising use of resources and maximising autonomy. This requires that the metasystem be able to demonstrate to System One that its use of resources is commensurate with the needs of the System to maintain cohesion. This means the development of feedback processes which enable the metasystem to be accountable to System One and mechanisms which enable System One to debate both purposes and commitment of resources.

11.3.2 Ideology

The proposal in Section 11.3.1 suggests a way to counter the danger of autocratic abuse of the model by including accountability loops which require the metasystem to be responsible to System One for its activities and use of resources. These also formalise the involvement of System One in the determination of the purposes of the System. The danger of internal autocracy is then minimised, although one dominant person can still emerge as a leader and persuade others to follow his purposes.

There is however a second danger of autocratic abuse in the application of the model and that arises with the intervention in a system by the observer or consultant. Each of the organisational models and the metaphors which are used to describe them belong principally to management scientists. As such, whether through the numerous metaphors proposed by Morgan[67 & 68] or the five selected by Flood & Jackson[5], they represent our ways of thinking about organisation. Used in an intervention they constrain the participants to think in our terms and not theirs. This, far from being emancipatory and participative, may be seen as confining others to think as we do, an autocratic abuse of expert power.

It is proposed that the stakeholders in a system must define the system and its boundaries for themselves, in doing so they determine their own constraints within their existing model of reality. The role of the intervenor then comes to be, as in the classroom study (Chapter Nine), to use his or her expert knowledge and models to help the stakeholders to explore and develop their models. This does not mean that the descriptive metaphors cannot be used, but that they should be used in intervention as a means of enriching the stakeholders understanding of their system, rather than for the intervenor to impose his or her views. This means that the stakeholder's model must be elaborated before the consultants model is revealed, i.e. the stakeholders must be allowed to articulate their understanding

before it is influenced by other models. The consultant then acts not in a way which is constraining but emancipatory or liberating.

If stakeholders are encouraged to take possession of the situation in this way there are two benefits. Firstly, their thinking is constrained only by themselves, and out of their increased understanding arises the freedom for them to change the system. They can change its boundaries and redefine it at will. Freedom is guaranteed in their recognition of the boundaries they have chosen, with the knowledge that there are other ways of defining the systems and, in the knowledge of their freedom to change or cross over those definitions and boundaries. Secondly, since it is their understanding which has been extended the outcome of the process belongs to them, not us. They then have ownership of the changes and control of implementation.

The proposals made under this and the previous section should help to address the problem, highlighted by Flood & Jackson(5 PG 113) that "the model depends for its proper use and functioning on social conditions which it does not itself sufficiently seek to engineer - a democratic milieu." It should however be remembered that models may be descriptive, prescriptive or diagnostic, but they are all abstractions from reality, intellectual constructs, and as such can engineer nothing. It is people who engineer organisations.

11.3.3 Utility

The proposal in 11.3.2 above has implications for the utility of the Viable System Model which has been criticised for being difficult to apply in practice. The deliberate inclusion of the stakeholders in an intervention has been shown in Chapters Eight and Nine to help overcome the resistance to change which is often provoked.

If the Viable System Model is used to help stakeholders to understand and develop their knowledge, and the concepts and ideas which it embodies become accepted within their system then it can become a process of management rather than an abstract tool for problem solving. The key ideas which need to become embedded are those of change and development to maintain the organisation in dynamic equilibrium with its turbulent environment. Organisational stability may be compared to that of a yacht, which, when stationary, will be tossed around at the whim of its enviroment, the wind and the sea. In motion it becomes relatively stable in relation to its environment, and, is able to take advantage of environmental influences and natural forces to progress along a chosen course. The limiting case is that the strength of the environmental forces must be within the design limitations of the yacht. In the case of organisational stability, the design limitations are the creative and innovative abilities of the human stakeholders. These, in practical terms, appear to be unlimited.

The objective of intervention should perhaps then not be considered as an attempt to perform a one off diagnosis and resolution of an organisation's problems, the method of traditional consultancy which ensures future problems to solve. It should become a process of intervention aimed at changing the process of management within the organisation such that heuristic goal-seeking behaviour becomes embedded. The Viable System Model then becomes an interactive tool for the ongoing process of mess management, the stakeholders in the system being able to understand how the organisation works and change it. The model describes the underlying structure of the activity, it does not specify ends.

A second thought can be drawn from the yacht analogy. Yachts are systems designed to take advantage of natural forces to ensure their stability and progress. Under sail, they do this with a maximum economy of effort, the wind which fills the sails, while disturbed, is not destroyed by its interaction with the yacht. Its energy is largely maintained. The yacht minimises its absorption of resources by harmonious interaction with its environment. Systems which are

designed to act in contravention of natural forces, such as aircraft, require massive amounts of energy to be pumped into them to achieve success. The energy which they use, whilst perhaps not destroyed is certainly changed by this process, and arguably damage is caused to the energy and the environment, e.g. the damage to the atmosphere arising from combustion of fossil fuels. The lesson suggested by this is that systems which are designed to harmonise with their environments, and this includes social systems, will be less expensive to operate than those which act in defiance of them.

The proposals outlined above will require "large scale changes in organisational structure"(5 PG 113), but the opportunity exists through the Viable System Model to breakdown the hierarchical and bureaucratic structures which have developed in many organisations. Hierarchical structures create situations where career progress means a movement from purposeful activity, the pursuit of a trade or profession, to control activity. This is particularly evident in Government Departments, Banks and Insurance Companies where the most senior posts tend to be controlling rather than purposeful. These structures ensure that those who are best at doing the job end up controlling others, yet, their fitness for the one activity neither proves nor disproves their fitness for the other. The situation can develop to one of dissatisfaction, both on the part of the organisation and that of the individual. This is a costly use of resources.

The Finco case study showed how the Viable System Model could be used to break down such a problem situation and improve both organisational performance and individual satisfaction. There are other implications to this such as the need to create different forms of career structure, different reward systems, to specify jobs differently and to increase trust and autonomy at the operational level. Each of these things can be achieved once the established model of the organisation, contained inside the heads of the stakeholders, is challenged and developed.

11.3.4 Methodology

The dependence of the Viable System Model on the neurophysiological analogy has been argued against by Beer and others. Section 11.3.1 argued that there is a need to move beyond the boundaries of thinking through the brain metaphor and the constraint of the brain model in order to enable the incorporation of capacity for self control in social systems, i.e. feedback from the metasystem to System One.

The established methodology, drawn from Flood and Jackson[5 PP 93-96] has been fully elaborated in Chapter Four. This section will use their framework as its base, interpreting and adding to the process as required, leading to a revised methodology. It is not within the scope of this thesis to critically reflect on these proposed changes. They represent a formalisation of the processes reported in Chapters Eight and Nine and a cue for further work in this area.

11.3.4.1 System Identification

The methodology requires first that the purpose of the system be determined. Beer[3] suggests that the purpose of a system is determined by what it does, its outputs. However, this leaves no scope for critical appraisal of purpose, either by an external observer, or a stakeholder. If the purpose of a system, fulfilled by System One, is defined by its outputs, which is what can be observed, then present outputs define present purposes. However, there is a problem, what the system does is not necessarily what the stakeholders think it does, or indeed, want it to do. For example Beer's[1 PG 12] interpretation of the purpose of British Rail as a system for stopping him smoking and working would be most unlikely to be in accord with the view of the Board of British Rail.

The methodology needs a step introduced which enables critical appraisal of the purpose of the system, asking not what it does, but what its stakeholders intend it to do. Taking Beer's example, to model British Rail as an anti-smoking system would generate an entirely different outcome to a modelling which perceived a purpose as a transport system. Although each would be valid for its imputed purpose only the second would contribute to a more effective and efficient railway, something which might be the purpose of British Rail from a management perspective. Effective and efficient pursuit of an inadequately defined purpose is of little benefit.

I suggest that in using the Viable Systems Model in a social system this step should be undertaken using a more or less formal participative approach, extracted for example from Checkland's Soft Systems Methodology or Ackoff's Interactive Planning. In organisations where it is difficult or impossible to bring together the relevant stakeholders, a variation on the Delphi technique or the Japanese ringgi system may be appropriate. In this way a view of the purpose of the system, defined by one stakeholder, may be circulated to each of the others who is free to amend it. This process may continue until a common view is achieved. Participants should focus on four key questions to aid this process:

What constitutes the system?

What are its outputs?

Do the outputs meet expectations?

What other or different outputs are sought?

Asking these questions should enable critical appraisal of the system and its purposes. These can then, if necessary, be redefined at the outset.

Criticism can be levied here that a consensual view of the purpose of the system may not be achievable. Similarly that, in practice, it may not be possible to debate purpose in any meaningful way, for example, if the purpose is given by a higher level system as in the case of Finco. In the first case, if the purpose cannot be agreed then the application of the Viable System Model is rendered inappropriate and some other model must first of all be employed to handle that issue. In the second case, the intervenor must determine whether he or she is content to work with the given purpose and that will depend on personal beliefs and values. It must be remembered that achievement of a truly consensual view of a situation may simply not be achievable since each participant may be seeking satisfaction of his or her individual objectives and may not be willing to sacrifice these for the good of the system as perceived by others.

The statement of purpose represents the collective perceptions of the stakeholders. Very importantly, it is not defined by a consultant or management scientist, who often either stands outside the system or is a supportive part of it, but by those within it and responsible directly for the fulfilment of its purpose. An exercise defining purpose would need to be undertaken at every level of recursion to be studied, and consistency across the levels ensured.

The purpose having been agreed, the second step is to determine the relevant system for achieving that purpose, together with its contained and containing systems. The relevant system must again be identified by, or at least in conjunction with, the participants. Identification of formal systems, such as a corporation or partnership will be relatively straightforward. An informal or conceptual system, such as the Trade Training Network in New Zealand examined by Britton & McCallion,(40) Commercial Broadcasting in the United States by Leonard,(41) or the "Class" considered in Chapter Nine will need to be defined and its boundaries determined by those who claim its existence.

Identification of the contained systems calls for a division of the activities within the system-in-focus into two categories, purposeful and enabling. Purposeful activities are those which fulfil the purpose of the system, they are the System One elements, the viable parts, of the system-in-focus. All activities which are not identified as purposeful should at this stage be treated as potentially being enabling.

The containing system, that of which the system-in-focus is part, may be more difficult to adequately define. I suggest that the most appropriate approach here is to select a containing system which is most useful for the purpose of the enquiry. This will be one that exercises a management or controlling influence on the system studied, e.g. the Franchisor in the case of Carco.

The identity of the chosen chain of viable systems, its purpose and existence, must remain open to question throughout any intervention and the subject revisited whenever considered appropriate by the participants in the study.

11.3.4.2 System Diagnosis

Further changes are proposed to this part of the methodology. Firstly, rather than the intervenor acting in a prime role of driving the study, the participants should do so. The intervenor acts in the role of Devil's Advocate, consistently questioning and challenging the findings of the participants in the process. This is considered to help the participants to explore and develop their understanding of the situation. This in turn assists them to push back the limitations on their actions, to learn to question their assumptions about the organisation's reality, and, to own the changes which result from the process. In this way the process becomes embedded in their way of thinking and they have ownership of resulting changes. This will help to overcome the difficulty of application of the model. It must be

accepted that in following this approach the redesigned organisation may not fully reflect the ideal encapsulated in the model.

Secondly, rather than naming the sub-systems through the numbers 1-5, they should be named according to their function e.g. Implementation, Co-ordination, Control, Audit, Development and Policy. The use of names rather than numbers serves two purposes. First, the names are descriptive of the activity undertaken, this eases understanding for those unfamiliar with the model. Second, the names are less directly hierarchical in their implications than the numbers.

Finally I propose that Systems 2-5 collectively should be known as enabling functions. Implementation, System One, fulfils the purpose of the organisation, and, while mutually interdependent, the other Systems exist only to enable System One to carry out its purpose. Without purposeful parts there is no need for their existence; they are necessary parasites. I consider that this conception of their organisational role helps to clarify the reason for their existence and to focus their activity, reducing the risk of pathologically autopoietic behaviour.

Each of the systems will now be briefly reviewed in turn to highlight difficult or confusing aspects. Further refinements will be added to the methodology.

Implementation: System One

If the purpose of the system has been adequately defined then each of the operational elements of its System One, which must be potentially viable systems themselves, should emerge readily from its examination. A frequent difficulty arises when studying a traditionally tiered and hierarchical organisation. The organisational levels displayed in the hierarchy rarely represent recursive levels of organisation. Departments or units shown will often not denote either purposeful parts or whole operations. Likewise, as in the Finco case study, a basic

assumption about the organisation may need to be questioned. For Finco this assumption was concerned with its physical network which had traditionally been seen as its basic building block. This view was replaced with a set of divisions of the customer base. It will often be the case that a number of separate activities will have to be brought together to constitute a recognisable, viable, operational element. It is vital for effective use of the model that this aspect of study is undertaken with care and that, if necessary, several modellings are undertaken to determine which is the most useful in the context of the purpose to be served.

It is essential to determine, in addition to the established requirements, whether System One Managers consider that they have sufficient authority and capability to enable the fulfilment of purpose. This aspect will be revisited in section 11.3.6 Autonomy, Development and Efficiency.

Co-Ordination: System Two

System Two is one of the most difficult systems to isolate within an organisation, often appearing to be passive rather than active. Beer suggests as one example the school timetable, another might be the allocation of Service Bays at Carco, or telling positions within a bank. Each of these serves to dampen potential oscillation between System One operations and reduces the need for routine decision making at System Three. System Two provides a service to System One and in doing so reduces the variety that System Three has to absorb.

System Two channels can also handle the soft issues of an organisation. For example aspects of organisational culture such as ethical standards can be communicated through this route as was shown at Carco (Chapter Eight). If such aspects are not to be seen as commands then they must be handled in this way. Poor handling of these matters of systemic cohesion or organisational glue have been seen in the development and subsequent breakdown of eastern European

nations this century. These seem to have been bound together through command rather than common interest, cohesion being ensured by apparently oppressive regimes. Once the pressure was released the nations have attempted to revert to their previously independent status.

All organisations have to deal with similar problems of creating and reinforcing a sense of identity and belonging, some do so well, others badly. While it is commonly held that five years will be taken for a sense of identity to be generated in a corporation after a takeover or merger, I have worked with some where this has not been achieved after twenty years, individuals clinging to the values and norms of their original company. Other organisations such as Hewlett Packard have a very strong sense of identity and employees who do not share in it will apparently rapidly leave the organisation. The recruitment process reduces the risk of this by involving future colleagues of a job candidate in the recruitment process, those who are not seen as a potential "good fit" are not employed. The "HP way" can be seen as a massive variety attenuator, affecting the behaviour of the entire workforce. To those on the inside it is not seen as following commands but as taking positive steps towards generating a sense of belonging.

An example of a seemingly totalitarian corporation is the Disney organisation. Disney considers itself to be in the entertainment business, and as such treats its staff, and expects them to behave, as cast members. The staff accordingly play a role when "on stage," having been instructed on their behaviour and provided with a script to follow. This seems reasonable given the nature of their product. However, recent instructions to staff at Eurodisney outside Paris to wear deodorant and "proper undergarments" at all times seems excessive since these aspects are not generally visible. They do not affect the quality of "performance." The organisation seems to be going beyond the needs of anti-oscillatory or even control, requirements and imposing a set of expectations values and beliefs which reduce individual autonomy to zero.

It remains to be seen whether such a massive attenuation of personal variety will enable the organisation to be succesful in Europe as it has been in the rest of the world. Disney appear to have created production line entertainment, with tasks specified using the machine view of organisation, much as in a car factory; how long will it be before similar industrial relations problems appear? Standards of education are, in general, increasing throughout the world, and increased attention is being paid to the needs and rights of individuals. Given these changes, it is difficult to accept that cohesion through corporate dictat, rather than individual commitment, can be sustained for much longer.

Control: System Three

System Three is responsible for the control of the already defined and ongoing activities of the system, and informs System Four of situations which cannot be handled under existing rules.

The established methodology requires that the components of System Three be listed. I consider that this is a particularly difficult area. It is necessary not simply to list Departments but to discriminate activities within those departments, since System Three and Four functions are often intertwined, e.g. a Personnel Department may be responsible for both day to day staff management functions such as payroll or pensions and for future management such as training and development of staff.

A division of this sort also emphasises the move away from the traditional functional departments and towards Beer's ideal of an Operations Directorate. Frequently in small organisations one individual may be fulfilling more than one, or even all, of the System Three functions. It is vital to the success of the organisation that he or she understands all of the roles played. This theme will be returned to in section 11.3.5 Role Articulation.

Further additional questions to ask are:

> How are the parts of Control made accountable, at this level of recursion, for the resources which they consume?
>
> How is their performance in enabling the fulfilment of purpose measured?

It will frequently be found that the answer to the questions is that there is no accountability; there is no measure of their performance. Control functions are recognised as necessary to the functioning of the organisation, and the cost and bureaucracy which arises is simply accepted as part of the expense of running the organisation.

A further step which can be added to the methodology at this stage is a critical examination of all the activities of System Three, asking how they contribute to the fulfilment of purpose, or, are necessary for the maintenance of the enabling function. This approach will help in the identification and resolution of problems of pathological autopoiesis, inhibiting the development of their own purposes.

The additional questions highlighted under this section, and for System One will help in the determination of the appropriate level of autonomy in the system studied, whilst ensuring cohesion.

The approach taken at Carco and Finco of incorporating System One Managers in System Three provides two benefits. First, they can monitor resource use by other System Three components. Second, they are provided with a view not just of their own element of the System but of the whole which helps to broaden their understanding of different needs.

A further difficulty experienced is in the understanding of the nature of System Three*, the audit. Many organisations carry out what they consider to be audits, but as Beer (3 PG 83) shows, these are frequently ineffective. Effective audit of System One activity is essential to amplify its variety to System Three. The enquiries into System Three* activity must examine and question whether audit enquiries are effective in fulfilling their purpose, or whether, as is so often the case, they have lost their power through becoming routine.

System Three* audits will also act as a variety attenuator at System One. The awareness that certain activities are unacceptable or proscribed and will bring retribution may inhibit the desire to engage in them. This serves to reduce the potential for friction with System Three. That System should also be conscious of its responsibility to reward System One for good performance, as well as punishing transgressions.

Development: System Four

System Four is responsible for the future development of the organisation. It is the key to adaptation and any organisation without this facility will experience great difficulty in coping with environmental change.

I consider that System Four is the root of any viable system, any new organisation emerging from an existing one to which it may or may not be similar. An idea or possible future arising in one system, if not accepted by that system, and carrying the commitment of its originators may lead to the emergence of a new and separate system. That new system will have as its initial purpose "planning of the new venture," and once the preparation has reached critical proportions it may break away from its host and seek to implememt its own future.

It seems though that most organisations having defined themselves and their future consider that the problem is solved. They cease to actively seek alternative futures or selves, emphasising internal stability and jeopardising viability. They view planning and management as actions, not processes. The essence of viability seems to rest in the ability to constantly redefine the organisation, its structure and purposes, in the light of evironmental disturbances while maintaining cohesion.

System Four activity, as highlighted by Beer, and by Flood & Jackson, is very often a poorly articulated, unwelcome and unaccountable presence in organisations. The development of a highly change oriented mechanism is inhibited in an organisation that resists change. The result of this weakness is evidenced by the obsession with short term results and the "fire-fighting" attitudes of many managers. Espejo & Schwaninger (eds.)(52) have proposed a new approach to considering organisational fitness which provides a framework for the discussion of development problems which should help to alleviate these difficulties.

I propose that changes be included in the established methodology to encourage focused, accountable System Four activity. The established questions in the methodology already adopt a critical stance for this System, aiming to discover whether the activity undertaken guarantees adaptation. As with System Three, measurements of performance and resource use need to be installed to inhibit the growth of autopoietic behaviour. Similarly, System One Managers need to be included in this development function since they can contribute to the essential model of the enterprise, they have after all greater knowledge of the system than any consultant or "staff" expert. The technological model of the enterprise, represented by Beer's Opsroom, outlined in Chapter Five, will be enriched by the inclusion of these staff who will bring to the ongoing debate the human values which must influence decision making. Since these Managers are making decisions which affect themselves they cannot behave autocratically. They are defining their own freedom.

It must be remembered that the purpose of System Four is to guarantee adaptation of the system-in-focus to environmental change. This is normally taken to consist of activity such as Market Research, Research and Development, etc. but must also include internal development of the organisation's facilities, e.g. how to take advantage of new technology, etc.. Unfortunately, experts in these areas often fail to focus on the needs of the organisation, focusing instead on the pursuit of the latest developments in their field of expertise. The rapid development of computer technology is a good recent example, with central computer departments often pursuing the latest technology, because that is professionally exciting, regardless of its usefulness for the enterprise. While System Four must explore developments which hold opportunities or threats for the future of the organisation, there must be means of evaluation and internal control which recognise and prevent useless pursuit of irrelevant developments.

System Four is, perhaps, the sub-system where the recursivity of the model needs to be clearly understood to enable the recognition of what constitutes a relevant development at any particular level of recursion. I suggest that this may be determined by two factors; time, and scope.

Scope will be determined by the membership of a higher level system which imposes constraints on the policy making freedom of System Five, a topic which will be explored further in the next section. Any research activity leading to developments which would require System Five to make policy decisions outside those boundaries must be seen as irrelevant at that level. That is not to say that the metasystem, in its System One management embodiment at the next higher level, cannot alert its metasystem to developments falling beyond the scope of its enquiries, but it should not utilise its own resources in this way.

The other factor is time. At any given level of recursion, the organisation will work within a relevant timescale. For example, in the production process at Cakes, the relevant timescale for a Process Manager at Recursion Two was "the shift," a

period of around eight hours in which a particular volume of output was required. The planning and development timescale for the manager was limited by the start and finish times of the shift. At Recursion One, the Manufacturing Manager had a broader timescale of the "Production Week." His planning activity at that level of Recursion was limited by that. In his embodiment at Recursion Zero (the Factory), development activity for Manufacturing had a wider timeframe, perhaps expanding to a year, while the scope of planning activity would similarly widen. Figure 11.1 represents this diagramatically.

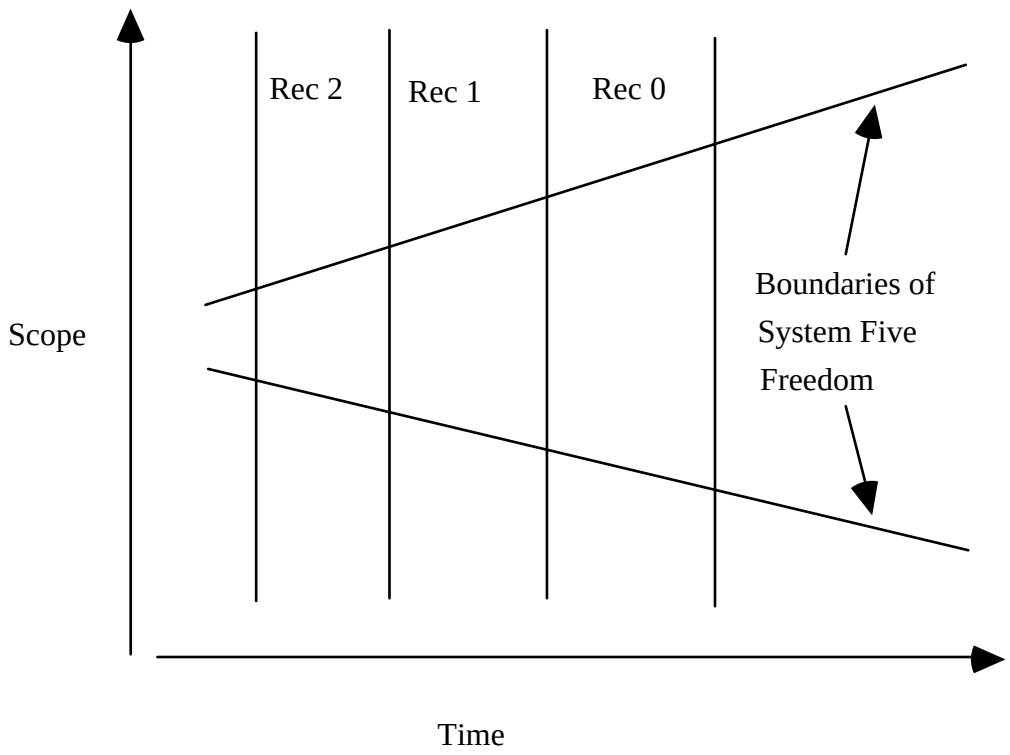

Determining relevance for System Four

Figure 11.1

An important feature of System Four is the ability to learn from past behaviour and avoid repetition of errors. This requires a facility for drawing out from past experience, not necessarily fine detail, but the principles which have underpinned

success or failure. A second requirement is to be able to acknowledge errors. Many organisations seem to work on an assumption that decisions are made with perfect information and are correct for all time. The rapid change and increasing complexity of the environment make it increasingly likely that changed circumstances will lead to a need for new and different decisions. Any decision can only be seen as relevant or correct on the basis of the information that was available when it was made. An alteration of that decision on the basis of new information should not be seen as an admission of human error but a modification to take account of the latest circumstances, a part of the process of learning.

The Finco case study provided an opportunity to work with this approach. Whilst considerable research enabled the determination of new objectives for the organisation and the broad shape of the structure was agreed at the highest level, the detailed planning and implementation was an iterative learning process. The bulk of the work took place on a live and real time basis, working with the people whose system was under development. As such, the plans were developed and implemented on an interactive basis.

The process was time consuming but considerable learning was achieved. The final task was to write a report which reviewed the whole process, eventually undertaken in seven locations, a report which included the apparent errors in development, and forms a record of the achievements rather than a detailed proposal. It is hoped that the report forms part of the memory of that organisation.

Policy: System Five

System Five is reponsible for the creation of identity of the system, that is its system of values, beliefs and expectations. Its role is to listen to the debate between Systems Three and Four and arbitrate between their conflicting demands. This could be viewed as a metasystemic System Two role, ensuring that present

and future operations of the organisation are co-ordinated. The diagrammatic convention adopted by Scwaninger[51] can be seen as representing this, with Systems Three and Four represented at the same level.

Since at any given recursive level System Five can only receive information from Systems Three and Four, it can only make decisions based on that information. Its function must be to minimise oscillation between the two. This will, as required by the logic of the model, absorb all remaining variety.

There are two flaws with this expectation. First, in a social system System Five will be comprised of a person or people. As demonstrated by the Carco study, no matter what the logic of the proposal or the need for decisions to be taken, an individual may be in this role who is apparently incapable of fulfilling it.

Second, there is a flawed assumption. That is that System Five, given the necessary information from Systems Three and Four has complete freedom to act in the best interests of the system. However, any one System is always part of a chain of systems, and System Five, as part of a System One element management unit of the next higher level of recursion in the chosen chain, is constrained in its freedom by its membership of that chain. In other words, if System Five acted only in the interests of its own level of recursion, there would be no guarantee of cohesion with its own metalevel.

It must be recognised then, that the behaviour of the metasystem, in particular System Five, is modified by its existence as a System One element management unit of the next higher level. Autonomy is inhibited by membership of the chain of systems.

This must be accounted for in the methodology for using the model. Any intervention recognises three levels of recursion, the system-in-focus, its contained and containing systems. A practical study must always be bounded by limitations of

time, finance or the interest of the organisation studied, there will always then be a highest recursive level studied. The practitioner, whether internal or external to the particular organisation, must always establish what limits on behaviour impact on the freedom to redesign the system by virtue of its membership of a wider system not under study.

These limitations were recognised in the Finco, Cakes and Carco case studies. In the first, the purpose of the system was given by the higher recursion. In the second, the purpose was constrained to "making cakes," since this was the purpose allowed by its belonging to Cakes Holdings. In the third, Carco's autonomy was limited by its choice of belonging to the Franchisor's chain of dealerships and constraints were accepted accordingly. Perhaps, if Beer and Allende had recognised that the autonomy of Chile was constrained by its belonging to a higher level of recursion, the "World of Nations," which had expectations of it, and addressed that aspect, the outcome of their work may have been different.

11.3.5 Role Articulation

Unlike the machine view of organisation, represented in the traditional organigram, the Viable System Model demands that roles and functions within the organisation be understood, not simply levels of authority. The organisation chart limits understanding to the allocation of blame and allows any individual to occupy only one box which is then considered to describe his role. The Teaching Viability case study showed how an individual may occupy a multiplicity of roles within an organisation.

Observation, and discussion with individuals occupying multiple roles suggest that they are often unaware of the differences, adopting a single organisational stance at all times, e.g. working supervisors who either always, or never, work on the production line as in Flood's(56) Tarty Bakeries study. It is essential when using the

model to explicitly recognise the different roles played by the people and thus to get beyond the limitations of the traditional hierarchy. These roles need to be incorporated in any job descriptions or outlines which are prepared in order to formalise such recognition.

The most important change however is to ensure that the roles are recognised by the participants. Individuals are normally comfortable in a particular role, especially when adoption of a different role has discomfiting implications for their other selves. A System One manager who also fulfils System Three and Four roles for a given level of recursion may find it difficult to make decisions in those roles which adversely affect his System One element, e.g. the decision to close, or reduce in size an unprofitable part of the organisation. This is not a reason for excluding them from such involvement, but for developing their understanding of the needs of the whole organisation so that they can make a decision in that interest.

11.3.6 Autonomy, Development and Efficiency

Organisations, in general, seem to regard staff training and development as a necessary cost of being in business, and as such seek to minimise such expense in the short term. Thinking about organisations in terms of the Viable System Model, and taking account of a desire to enhance freedom brings a new perspective on this. That is, that training may be regarded as an investment in the future of the organisation, and, arguably could be treated in this way for accounting purposes, some payback being sought through reductions in the cost of control systems.

The essential argument is this. Training and education of staff should increase their capacity to absorb variety. If further variety is absorbed at System One, then there is less to absorb in the metasystem. This suggests that the size, and therefore cost, of the metasystem functions can be reduced. There is less need to exercise control and development over those who are self-controlled.

Increasing the capacity of individuals to absorb variety is then both emancipatory and cost effective. They do not need to be regulated, their behaviour does not need to be policed, and they do not need expensive bureaucracy to supervise them. The greater knowledge they have to understand their own interests and limitations, and the needs and limitations of the system to which they belong, the more likely they are to act in accordance with the cohesion of the system. Alternatively, and this may be considered as the risk, if they do not like or wish to share in the purposes of the system they may choose to try and change it, or leave it. In either case, they are, in principle, freer to act in their own interest, as determined by themselves. I acknowledge the possible argument that economic reality may inhibit the freedom of the individual in this respect in a particular situation but will not pursue it here.

A system relies upon cohesion, and this can be imposed on its human participants through rules and regulations, or, developed through personal commitment. Imposition of rules absorbs resources and needs an autocratic approach for its success. Personal commitment takes time to develop but is cheaper to control, and, since those who do not share in the values of the system may exercise their right to leave it, or engage in debate about it, the system identity can develop in accord with their collective wishes. If it becomes too oppressive for some individuals then they must have the right to leave. If at every recursive level in the chain of systems, the System One managers are incorporated in the metasystem, then the collective views of the human stakeholders will always be heard. If they understand the needs of the system, and share its values, i.e. identity is shared between Systems One and Five, then cohesion will be achieved at minimum cost.

The problem arising is how we should measure the variety absorption capacity of an individual. It is normal to do this through Professional examinations, Apprenticeships and Academic awards. Likewise, many large organisations have training departments engaged in the development of staff. A lot of these training

courses do not incorporate measurement of the student's achievement, therefore, the benefit, if any, is unknown.

I suggest that an effective organisation will take two approaches to dealing with this situation. Firstly, the knowledge gained, and in particular, the ability to apply it in a practical context should always be evaluated, not necessarily by examination in the formal sense, but by ongoing monitoring of the individual's performance in using the newly acquired knowledge or skills. Further training input should be provided to correct errors arising.

Secondly, organisations should use the insights provided by the Viable System Model to understand the variety absorption capacity necessary for the completion of any particular role and seek to match that with the perceived variety of the person appointed. This approach should help to avoid the mismatches so often seen, such as the appointment of a bio-chemist as a Factory Manager in one organisation. There is no doubt that the individual concerned had adequate skills as a bio-chemist, however he had virtually none for the task to which he was appointed. Needless too say, problems soon appeared in the management of that factory.

Once variety absorption is understood, and its relationship to individuals articulated then, like other management tools, it can be manipulated. This I call flexing freedom. For example, a Sales Manager may grant a degree of discretion to a newly appointed salesman in the negotiation of discounts, say up to 10% without referral. At this level the Salesman can absorb a particular amount of variety from the environment in which he operates and enjoy a fixed level of autonomy. The Sales Manager can monitor the performance of this individual, and in the light of that monitoring either reduce the Salesman's autonomy, or, increase it, simply by changing the level of discount which he may negotiate. Similarly, freedom can be flexed under different external or internal conditions, e.g. a boom in the market, a

fall in demand, oversupply at the factory. The Sales Manager can flex the freedom of all of his subordinates over time, within the limits of his own autonomy.

Flexing freedom can be, and often is done, by other parties. For example the Credit Controller (a part of System Three) may, in his perception of the interests of the system reduce, or extend, the credit arrangements available to certain customers. This can cause problems, particularly of internal conflict. Both Salesman and Credit Controller consider that they are acting in the best interest of the system, but they are pursuing different purposes, the one seeking to maximise sales, the other to minimise risk. Resolution of this type of conflict can only occur when there is effective communication between the parties in a common language. This reinforces the argument for the Managers of System One elements to be recognised and treated as part of the metasystem.

The approach has two probable and direct benefits. Firstly, the individual will be better satisfied since he will be competent for the appointed task. Secondly, since he or she can absorb more variety, then less variety will be needed from Senior Management to guide him.

This approach to the treatment of individuals at all levels of organisation will help to avoid the dangers of anti-organisational behaviour arising in organisations adopting the machine model where the creative capacities of individuals, not being required for the fulfilment of the given task, will be directed elsewhere. This must eventually lead to industrial anarchy. It is vital from both the cybernetic and human perspectives to enhance the role of the individual in the organisation through participation and training to ensure maximum variety absorption at each level, and the harmonisation, wherever possible, of individual and organisational objectives. The pool of promotable people in an organisation defines the gap between actuality and capability in terms of effective use of human resources. It is in the interest of every party to minimise the gap.

The practical, organisational and philosophical developments associated with the need to promote greater autonomy will require further research and education to surmount. There are a great many people whose power and status are guaranteed by the current system, they are threatened by the proposed changes and must be convinced of the long term benefits.

A particular interest here is to elaborate and understand a difference between training and education. Training I interpret as being the teaching of a particular set of skills, or body of information, such that the trainee becomes able to replicate the actions of the instructor. Education I consider to be the teaching of a set of skills or body of information, together with the philosophy which underpins it. In this way the pupil becomes aware of the assumptions and limitations of his knowledge and is able to re-interpret that knowledge in the light of changing circumstances. An example of this might be the teaching of young drivers. Training in the mechanical movements necessary to control a car is relatively simple, with practice almost anyone can acquire that skill. Educating a young driver to understand the performance limitations of the vehicle, and, how his behaviour must harmonise with that of other road users, such that he or she drives in a responsible manner, is much more complex, requiring the sharing of a system of beliefs and values which cannot be imparted easily in a short time. Currently these are normally acquired through experience. In the process of acquiring the experience, which enhances the training, the young driver is a risk both to him or herself and to other road users. Nonetheless, the driver can pass a driving test in the mechanical skills and need never acquire the subsequent learning, having been told that he or she can drive, what else is there to learn?

11.3.7 Summary

This section has reviewed the theory, utility, ideology and methodology of the model. Changes were introduced to thinking and methodology which aim to increase understanding and accessibility of the model. The methodological changes add to the established methodology suggestions that cater not simply for "What to do" as established by Beer and Flood & Jackson, but "How to do it." It is appropriate to acknowledge again that these suugestions are a formalisation of my practice of using the Viable System Model, and, that others such as Checkland and Ackoff have devoted considerable parts of their work to the development of participative methodologies. My suggestions are a beginning, not an end. The changes incorporate both critical reflection on the purpose and construction of the system being studied, and, a potentially participative approach. This is intended to enable stakeholders in a system to define and resolve their own situation, using the Viable System Model to develop and enhance their own models. This is seen as contributing to their freedom. The revised methodology forms appendix iv to this thesis.

11.4 Conclusion

This chapter commenced with a SWOT analysis through which the superiority of the Viable System Model was demonstrated when compared to the dominant models of organisation. The second part of the chapter reviewed the model, explaining additions to understanding and changes to the methodology. Chapter Twelve will summarise these findings and incorporate proposals for further research.

Chapter Twelve

Conclusions and Future Research

This final chapter consists first of a summary of the principal findings of the work undertaken. The second part of the chapter outlines proposals for further research.

12.1 Introduction

This brief chapter consists of two parts. The first summarises the findings of the theoretical and practical research, the contribution to knowledge of this thesis. The second outlines proposals for further research.

12.2 Summary of Conclusions

This thesis makes a number of contributions to knowledge about the Viable System Model. These are summarised as follows.

12.2.1

The basic proposition of this thesis, that the Viable System Model is a more adequate model of organisation for contemporary managers than the dominant models, has been demonstrated through their elaboration and comparison. It has also been proposed that the use of the Viable System Model can enhance the

value of other, reductionist, tools of organisation design by placing their contribution within the context of a purposeful system.

12.2.2

Chapter Five consists of the most comprehensive review to date of the prior published work concerning the Viable System Model. The chapter traces the major applications, commencing with and building from Stafford Beer's own work in Chile. It addresses developments in understanding and utilising the model. It summarises the principal criticisms of the model, and, incorporates a personal intrepretation of Beer's philosophy in relation to management and the Viable System Model.

12.2.3

The ideological concern, expressed by Ulrich(31) and others, that the use of the model carries with it the possibility of autocratic abuse has been suggested to be unfounded. The cybernetic tools may certainly be used in this way, but that denies the principles which underpin the model. An autocratic use corrupts the model, threatening viability.

Practically, the danger of such autocratic abuse has been minimised by the development of the participative methodology. Built upon the earlier crystallisation by Flood & Jackson(5) the methodology was described in Chapter Eleven and is summarised in Appendix iv. The revised methodology emphasises the role and purposeful activity of the stakeholders in the system and recognises that communication and control within organisations may be represented by the social process of human interaction. This participative approach also helps to overcome

the difficulty of application of the model by involving those affected in the process of diagnosis and redesign.

The revised methodology also incorporates critical review of the purposes of the system studied by those involved. This is seen as demanding consideration by the stakeholders, not simply of what is achieved, but what is intended. The aim is to ensure that agreement about the purpose of the system is shared by the stakeholders, and to allow any divergence of opinion to be resolved at an early stage.

12.2.4

The role of the model and the cybernetician or management scientist in an intervention has been examined. It has been demonstrated that the Viable System Model can be used to develop the understanding of the stakeholders in the system. This is proposed as an emancipatory approach, enabling them to explore the definition and boundaries of the system and define their own freedom. The aim of the intervention then becomes not to "solve the problem" but to change the process of management such that the stakeholders can command their own future. Thinking about the organisation in terms of the concepts of viability creates a new and different understanding.

12.2.5

The logic of the Viable System Model has been taken beyond the neurophysiological metaphor used to describe it. In so doing it has been possible to suggest the inclusion of mechanisms which enable accountability to be achieved, at the metasystem level, for resources used. This is considered as inhibiting the growth of pathologically autopoietic behaviour.

12.2.6

Accessibility of the model has been enhanced. Firstly, by explicitly making its use participative. Secondly, by describing the model in the language of the system studied, and particularly by the use of names rather than numbers to describe the five sub-systems. Thirdly, by the proposal that all activities should be regarded as either purposeful or enabling which allows a new focus to be obtained on the activities of some parts of organisation hierarchies.

One of the intentions of this thesis was that it should be written in a way which allowed non-management scientists to appreciate and understand the value of the approach. This accessibility has been tested by two such candidates and the text modified where necessary to enable their understanding. They now appear to have a sound understanding of the principles and benefit of the model.

The use of the Viable System Model in understanding organisational roles, in enhancing organisational efficiency and as a device for conscious flexing of individual freedom all contribute to this accessibility. Role articulation being made explicit, the need to incorporate System One managers in the metasystem has also been emphasised. This helps to ensure common understanding, and sharing of values and expectations within the system.

12.2.7

The value of training and development to an organisation, and its treatment as an investment rather than a cost, has been proposed. This is considered to have benefits for both organisations and individuals, since it can reduce overall cost for the organisation by the creation of organisations which are self-controlled, such as the Large Corporate element at Finco.

12.2.8

Finally, there is the recognition that freedom for a system is always to some extent curtailed by its membership of a chain of systems and that this must be accounted for. In practice it cannot be ignored. Arising from this it has been suggested how System Five is constrained and how this in turn contributes to the definition of relevance for the development activity occurring in System Four.

12.3 Further Research

There are a number of areas requiring further work to be undertaken.

12.3.1

The findings rest on the work undertaken in the four case studies. This is a small base on which to propose the changes. The revised methodology requires further rigorous testing and development in a wider variety of organisations.

12.3.2

The impact of training and development on the capacity of staff to absorb variety needs to be rigorously assessed. The suggested measurement for this is the ability to decrease the amount of higher level control activity.

12.3.3

Studies need to be undertaken which deal specifically with the development of resource utilisation measurement within the metasystem. The benefit of such work in breaking down breaucracy needs to be established.

12.3.4

Further studies need to be undertaken with the development of self regulating, self organising work groups.

12.5 Conclusion

This final chapter has summarised the principal findings of this thesis and outlined a programme of further research.

CARCO

Weekly Business Return

Week ending .../.../...

Vehicle Sales Department

		Number	£ Cost	£ Ave.Val.	£ Total G.P.	£ Ave/veh
Sales	New					
	Used					
	Trade					
Prospect	Rec'd					
Calls	Made					
	Demo's					
Advert	NWN					
Response	TVT					
Other	F&I					
Income	Careplan					
	Cordiale					
Totals						

Target:	Average GP Per vehicle:	£350 New	(YTD: £265)
		£500 Used	(YTD: £435)
		£+ve Trade	(YTD: £(24))
	Prospect Calls made:	50 p.w. SR/RJ, 25p.w.MT	

Service/Recovery Department

Average No. of Productives
(inc. Recovery Driver & App)
Hours available (a)
Hours sold (b)
Bonus hours earned
Average Productivity (b/a * 100/1)
Hire Car Income
Other Income

Target: Average Productivity 90% (YTD: 84%)

Service Prospect Calls
Breakdown Opportunities
Breakdowns Attended
Value of “Add on” service business
Number of MOT’s
MOT “Add on” business

Bodyshop

Average No. of Productives
Hours Available (a)
Hours Sold (b)
Average Productivity (b/a * 100/1)
Value of “Add on” repairs
Other Income

Target: Average Productivity 90% (YTD: 67%)

Parts Department

		£	£	£	£
		Trade	Retail	Internal	Van
Sales (Income)					
			£	£	
			Franchisor	Factor	
Purchases:	Stock				
	VOR/Urgent				

Target: Sales p.w.: £15500 (YTD: £15130)

Forecourt

Fuel Sales (Gallons)
Shops Sales (£) (Accessories)
Shop Sales (£) (Other)

Carco: Summary of Financial Information

Profit/Loss Account

	1991	1992
	£	£
Turnover	4813120	5093754
Gross Profit	588263	618210
Operating Profit	(89764)	22572
Net Interest Payable	241260	210673
	---	---
Profit/(Loss)	(331024)	(188101)
	========	========

Balance Sheet

	1991	1992
	£	£
Fixed Assets (a)	2222276	1864678
Current Assets (b)	1068729	709107
Creditors (< 1 year)	2112162	1931984
	---	---
Net Current Liabilities	1043433	1222877
	---	---
Total Assets less Current Liabilities	1178843	641801
	========	========
Creditors (> 1 year)	72161	51307
Provisions	278000	155200
	---	---
Net Balance Sheet Value	828682	435294
	========	========

Notes

a) Revaluation of land and buildings.
b) Partial liquidation of vehicle and parts stock.

SB Foods:
Case Study using the Viable System Model

Background

SB Foods is a company within the Sundries Division of Victuals, a major supplier of manufactured and processed food to multiple retailers. SB Foods itself has two factories, as well as a "Head Office" function which deals with the Sales, Central Buying and Distribution aspects of the business. It is this Head Office function that deals primarily with the Sundries Division management of Victuals.

SB Foods has recently completed a major extension and refurbishment of Factory A which was intended to enable the factory to absorb all of the production obtained from Factory B. This plan has proved to be impossible as output volume has increased at Factory A utilising the space which was to be made available for Factory B production.

Factory B, which has a poor industrial relations record, was for a period of two years (while the Factory A extension was being built), operating under the threat of closure, a threat which was well known to both management and staff. The inability of Factory A to absorb production from B has led to a reversal of the closure decision and the Senior Management of SB Foods now wish both to retain the factory and develop its volume to ensure long term viability.

Task

SB Foods has recently appointed General Managers, with profit responsibility, to both factories. The General Manager of Factory B has asked for your assistance. He recognises that change is needed at the Factory but needs your help to determine the current state of the operation, what changes should be made, and, how the organisation will benefit.

Use Viable System Diagnosis to model the current organisation of the Factory, determine where the problems lie and offer preliminary suggestions for redesign.

Requirements

1) A 20 minute presentation by each group of their initial model, diagnosis and recommendations. This should involve the use of diagrams where appropriate and a brief section covering implementation of the changes.

2) A written report, in note form, covering the content of the presentation and highlighting areas where VSD was not considered helpful.

Procedure

The diagnostic process should follow the methodology provided in Chapter Five of Creative Problem Solving (Flood & Jackson, Wiley 1991).

Further Information

This information has been gathered through a series of interviews with all levels of staff in the factory and through observation.

1) Factory B is on three floors:

the top floor is a preparation and mixing area

the middle floor cooks and packs three product ranges, Unit, Corn and Bar, representing 40% of product output (split 30/5/5)

the ground floor cooks and packs a single range of products, Slab, representing the balance of output, as well as housing the Stores and Despatch departments

an additional product range, Xmas, is produced on the middle floor during the second six months of the calendar year

other Departments include, Emgineering, Technical, Quality Control, Hygiene, Administration, Personnel, and, Finance.
(The last two of these do not report to the General Manager).

the Factory has a Canteen and Staff shop (which sells reject output), both of which report to the Health, Safety and Hygiene Manager.

2) The manufacturing process for all output is the same:-

Mix, Deposit, Bake, De-tin, Cut, Process and Pack.

3) When the decision was made to close this factory a caretaker manager was appointed with a brief to maintain production at all costs in the short term. To achieve this a number of events have occurred:-

staff have been granted higher status positions, e,g, Foreman, Leading Hand, Supervisor, in order to "buy off" problems with the Union. This has been done regardless of the need for a higher grade in the functions to be fulfilled, e.g. Supervisors with no subordinates.

procedures and working practices have been allowed to deteriorate, e.g. morning and afternoon tea breaks are stretched from fifteen minutes to thirty minutes, lunch break is stretched from thirty to forty-five minutes, an end of shift shower break is taken by staff in the mixing department, toilet breaks are treated as routine rather than exceptional and minimal interruptions to work.

absenteeism runs at around 15%, commonly staff will take "sick leave" up to the limit beyond which sick pay ceases.

standards of hygiene are inadequate and maintenance of plant and equipment is only undertaken in the event of a breakdown.

4) Managers and others in Supervisory positions have limited understanding of their roles and no adequate articulation of the performance expectations of the Senior Management.

5) There is a lack of clear delegation of authority, Managers and Foremen are apparently unaware of the level of decisions they can take. This has meant that they have taken decisions in the past which subsequently have been overridden by Senior Management.

6) There appear to be too many Managers and Foremen.

7) Managers are only responsible for part of a process, in the event of a failure blame is passed up and down the chain of events.

8) Management at all levels fail to support and implement established Rules and Procedures.

9) The Union is relied upon as an information source to a far greater degree than the Management.

10) Management is thoughtless, that is to say, the prevailing method of decision making is to do that which has always been done.

11) There appear to be no adequate mechanisms for monitoring either, Departmental, Process or Personal performance. The only performance measurement is of labour utilisation for the Production Managers on the First and Ground floors. This operates in such a way that the Managers are working to maintain production regardless of the level of customer orders. This approach is fundamentally flawed in that whilst Managers are maximising labour utilisation they are ignoring the other costs of overproduction, e.g. the costs of transport, freezing and stocking of excess output.

12) Overtime and Shift payment systems, intended to reward staff adequately for long or unsocial working patterns are systematically abused by both Managers and Staff. This is tolerated as a way of "keeping the peace."

13) The level of basic pay at all grades is such that the Factory has one of the lowest paid workforces in the local community.

14) The capability and professionalism of many of the Managers and Foremen is doubted by their peers, superiors and subordinates. The majority of them have risen to their posts from the shop floor with little or no training, it has simply been "their turn."

15) Communication is poor throughout the organisation. At a personal level, some of the Foremen do not have the ability to speak, write or understand the English language.

16) Managers consider that Foremen need constant guidance and instruction throughout a shift, including control and setting of equipment, e.g. relighting burners on ovens.

17) While a number of basic management courses have been run in the short period since the appointment of the new General Manager, a large number of candidates have not attended as either they consider it a waste of time, or, their Managers have refused to make them available. One Manager, who has completed the course, was unable to implement changes on his return due to lack of support from the Senior Management.

18) The workforce and management consider that they produce a consistently high quality output notwithstanding an ongoing reject rate of around 10%.

19) The line Quality Inspectors are expected to undertake 100% inspection of output. When running, each production line has an output rate of around 90 units per minute, Inspectors are required to check presentation, size, appearance and labelling for each item. There are six Quality Inspectors to deal with the two production lines as well as all other quality control aspects of the Factory.

20) Communication between Production staff and Product Development staff is minimal. Product Development reports to the Commercial Director of SB Foods, not the General Manager of the Factory. Product Development staff are not involved in pre-production trials of new products on the plant, nor do they advise Production staff of forthcoming changes until the last moment. This is largely a function of the relationship between SB Foods and its customers. Once a product specification has been agreed with a customer it will normally be launched within a few days.

21) The "grapevine" is, after the Union, seen as the most reliable information source. Communication is such that one Senior Manager only found out about a major factory visit by the most important customer through a Ground Floor cleaner.

22) Replacement staff are not available to cover absences through sickness and annual leave. The Personnel Officer will not obtain relief for these absences, instructing Managers to "cope." This is normally achieved by substantial overtime working often until 9 p.m. at which time a shift premium of 17.5% is payable for the whole shift.

23) There is no workload or staffing monitoring system in use, Managers operating on the numbers they have always used. There is no explicit requirement for them to attempt to reduce numbers through revised working practices or increased automation.

24) There is no flexibility of labour between the processes or the product lines, yet the workload in one area will frequently peak while there is a trough elsewhere in the process.

25) Provisional customer orders are recieved on a weekly basis with daily confirmation of final outloading requirements. The Production Managers ignore these provisional orders which are notoriously inaccurate. They prefer to produce

according to the previous week's final orders with an adjustment for "instinct and experience." Daily production is always within 10% of final orders, usually by way of an excess. The factory has never cut a customer delivery for lack of output.

Final orders are used only by the Despatch Foreman for loading vehicles.

The Stores Foreman ignores both provisional and final orders, he orders stores to maintain a stable supply of all items. The factory rarely runs out of any item but frequently has cause to throw away perishable items which have been overstocked.

26) There are no routine, planned management meetings.

27) The General Manager has a very open style and wishes to have working for him Managers who will manage.

28) Health and Safety requirements are frequently not achieved, machines often being in a hazardous condition. The Engineering Manager has advised Production Managers that "no funds are available for that repair."

29) The whole Personnel function is carried out by the Personnel Officer. Problems, complaints and grievances are all directed to her by the line Managers. She has no executive authority in any of these matters.

30) There is no process control system in place such that batches can be tracked in their progress through the factory. This will become a mandatory requirement in the near future to comply with proposed Food Safety legislation.

31) Key Personnel and Reporting Lines

SB Foods Head Office:

Managing Director - reports to Sundries Division management.

Commercial Director - reports to the Managing Director and acts as Salesman to the principal customers. He is supported by a General Trades salesman and two Product Development teams, one at each factory.

Finance Director - reports to the Managing Director, supported by a Plant Accountant at each factory and a team of accounts staff at Head Office.

Operations Controller - reports to the Managing Director. Through his subordinate team, all at Head Office, acts as buyer of raw materials and packaging and handles product distribution.

Personnel Controller - reports to the Managing Director and takes direct responsibility for the entire Personnel function with particular responsibility for Management Development. He is supported by a Personnel Officer at each factory.

SB Foods - Factory A:

General Manager - reports to the Managing Director and takes responsibility for the entire operation of Factory A.

SB Foods - Factory B:

General Manager - reports to the Managing Director and is fully responsible for the operation of Factory B.

Manufacturing Manager - reports to the General Manager and is responsible for all aspects of production from goods in to despatch.

Engineering Manager - reports to the General Manager and is responsible for all aspects of site, plant and equipment maintenance. He is supported by an Assistant Manager and a Foreman Fitter. The workforce consists of a team of fitters and a team of electricians together with a painter and storeman.

Technical Manager - reports to the General Manager and is responsible for all technical aspects of the Factory including adherance to food safety standards, customer product specifications, Health, Safety and Hygiene. He is supported by a Health, Safety and Hygiene co-ordinator (who also has responsibilities at Factory A), the Quality Control Manager who is supported by three quality assurance staff in the laboratory and six line inspectors, and the Specification Manager who together with the Food Chemist prepares and maintains product specifications for both factories. The Health, Safety and Hygiene co-ordinator takes responsibility for the running of the canteen which has two Foremen and four staff, and the Staff shop which has one Foreman and one member of staff. Also reporting to him is the Assistant Hygiene Manager who, through his two Supervisors, is responsible for the cleanliness and hygiene of the Factory and equipment.

Stores Manager - reports to the Manufacturing Manager and is responsible for the ordering receipt and storage of raw materials and packaging. He is supported by a Foreman, a Leading Hand, one operator and a clerk.

Mixing Bay Manager - reports to the Manufacturing Manager and is responsible for the preparation of cake mixes and delivery of these to the production areas. He is supported by a junior Manager, three Foremen and two Supervisors.

Production Manager, First Floor - reports to the Manufacturing Manager and is responsible for all output from this floor. He is supported by one junior Manager, a Xmas Foreman (working as an ordinary hand for six months of the year), a Bar

Foreman (responsible for "minding" a fully automated machine), a Processing Foreman, a Bar packing Foreman and a Corn Foreman.

Production Manager, Ground Floor - reports to the Manufacturing Manager and is responsible for Slab output. This Manager is supported by two junior Managers, a Depositing Foreman supported by a Leading Hand, two Shift Oven Foremen each supported by a Leading Hand, a Cream Room Foreman supported by one operator and servicing both production floors, and a Packing Foreman.

Despatch Manager - reports to the Manufacturing Manager and is responsible for the safe custody and outloading of completed product to customer vehicles. He is supported by one Leading Hand, one clerk and two operators.

32) There are no job descriptions in force for the Managers and Supervisory grades.

33) Morale is poor in the factory and this has not been helped by the recent replacement of the Manufacturing Manager and the junior Manager in the mixing bay by two staff from Factory A where the General Manager was also previously based. Foremen throughout the Factory consider that their future careers are threatened by these moves as vacancies at this level have, for thirty years, been filled internally.

34) Line Managers have no responsibility for setting or managing the budgets of their departments.

Revised Methodology for the Viable System Model

This methodology uses that of Flood & Jackson[5 PP 93 - 95] as its base. New material is in bold print, where substituted, Flood & Jackson's words are in brackets and italics.

System Identification:

As with any "unitary" methodology it is necessary initially to identify or determine the purpose(s) to be pursued.

Ask what constitutes the system.
Define the outputs of the system.
Ask if those outputs meet the stakeholders' expectations?
What other, or different, outputs are sought by the stakeholders?
Establish from this whether there is an agreed view of the purpose of the system. (In the event of no agreement being achieved or achievable, pursue the enquiry through all or part of a different methodology).

Taking the purpose as **defined** (*given*), determine the relevant system for achieving the purpose. This is called the "system in focus."

Remember that the purpose of a system is what it does and what the viable system does is done by **Implementation** (*System 1*) (so it is **Implementation** (*System 1*) that produces the "system in focus").

Specify the viable parts of **the Implementation activities** (*the System 1*) of the system in focus.

Identify the apparently enabling activities carried out within the system in focus.

Specify the viable system of which the system in focus is part (wider systems, environment, etc.). **This should be that system which is considered the most useful for the purpose of the enquiry and will normally exercise a management or controlling influence.**

System Diagnosis

In general, **ask the participants to** draw upon the cybernetic principles to carry out the following:

Study the **Implementation functions** (*System 1*) of the system in focus and:

- for each **Implementation element** (*part of System 1*) detail its environment, operations and localised management;
- study what constraints are imposed upon each **Implementation element** (*part of System 1*) by higher management;
- ask how accountability is exercised for each part, and what indicators of performance are taken;
- **determine whether Implementation Managers have adequate authority and capability to enable the fulfilment of purpose.**
- model **the Implementation elements** (*System 1*) according to the VSM diagram.

Study the **Co-ordination functions** (*System 2*) of the system in focus:

- list possible sources of oscillation or conflict between the various **Implementation elements** (*parts of System 1*) and their environments and identify the elements of the system (the various **Co-ordinating** (*System 2*) elements) that have a harmonising or damping effect;

- **determine whether "soft issues" such as ethics, morals and culture are addressed through this function.**
- ask how **Co-ordinating activity** (*System 2*) is perceived in the organisation (as threatening or as facilitating).

Study the **Control functions** (*System 3*) of the system in focus:

- list the **Controlling** (*System Three*) components of the system in focus;
- ask how **Control is exercised** (*System 3 exercises authority*);
- ask how resource bargaining with the **Implementation elements** (*parts of System 1*) is carried out;
- determine who is responsible for the performance of the **Implementation elements** (*parts of System 1*);
- **establish whether Control and Development activities are adequately discriminated from each other.**
- clarify what "audit" enquiries into aspects of **Implementation** (*System 1*), **Control** (*System 3*) conducts;
- **are audit activities sporadic or routine?**
- understand the relationship between **Control** (*System 3*) and **Implementation** (*the System 1*) elements (is it perceived to be aurocratic or democratic?) and find out how much freedom **the Implementation** (*System 1*) elements possess.
- **how are the parts of Control made accountable, at this level of recursion, for the resources which they consume? how is their peformance in enabling the fulfilment of purpose measured?**
- **are all Control activities necessary to the maintenance of the system?**

Study the **Development function** (*System 4*) of the system in focus:

- list all the **Development** (*System 4*) activities of the system in focus;
- ask how far ahead these activities consider;
- question whether these activities guarantee adaptation to the future;

- determine if **the Development function** (*System 4*) is monitoring what is happening to the environment and assessing trends;

- assess in what ways, if any, **the Development function** (*System 4*) is open to novelty;

- find out whether **Development** (*System 4*) provides a management centre/operations room, bringing together external and internal information and providing an "environment for decision;"

- question if **Development** (*System 4*) has facilities for alerting **the Policy function** (*System 5*) to urgent developments.

- **how are the parts of Development made accountable, at this level of recursion, for the resources which they consume? how is their peformance in enabling the development of the system measured?**

- how is the relevance of development activity determined?

- how does the Development function learn from the experience of the whole system?

Study the **Policy Function** (*System 5*) of the System in Focus:

- ask who is on "the board" and how it acts;

- determine what constraints are imposed on Policy making by the next higher level of recursion; **how do these limit freedom to adapt?**

- assess whether **the Policy function** (*System 5*) provides a suitable identity for the system in focus;

- ask how the "ethos" set by **the Policy function** (*System 5*) affects the "perception" of **Development** (*System 4*);

- determine how the **Policy** "ethos" (*set by System 5*) affects the **Control - Development** (*System 3-System 4*) homeostat (is **Control or Development** (*System 3 or System 4*) taken more seriously?);

- investigate whether **the Policy Function** (*System 5*) shares an identity with **Implementation** (*System 1*) or claims to be something different.

Check that all information channels, transducers and control loops are properly designed.

At each stage of the process critically review each response with the participants to help them explore and develop their understanding. Amend results as necessary.

References

1) Beer, S. (1979). *The Heart of Enterprise*, Wiley, Chichester.

2) *The Straits Times*, (16/10/92), The Straits Times Press (1975) Ltd., Singapore.

3) Beer, S. (1985). *Diagnosing the System for Organisations*, Wiley, Chichester.

4) Robb, F.F. (1989). Cybernetics and Suprahuman Autopoietic Systems, *Systems Practice*, **2**, 47-74, Plenum, New York.

5) Flood, R.L. & Jackson, M.C. (1991). *Creative Problem Solving*, Wiley, Chichester.

6) Taylor, Frederick W. (1911). *The Principles of Scientific Management*, The Plimpton Press, Norwood, USA.

7) Huczynski, A. & Buchanan, D. (1991). *Organizational Behaviour*, 2nd Edition, Prentice Hall International (UK) Ltd., Hemel Hempstead.

8) Fayol, H. (1916). *General and Industrial Management*, SRL Dunod, Paris. (Translated by Constance Storrs, 1949, Pitman).

9) Pugh, D.S. (1990), *Organization Theory*, 3rd edition, Penguin, London.

10) Flood, R.L. & Carson, E.R. (1988). *Dealing with Complexity*, Plenum, New York.

11) Mayo, E. (1949). *The Social Problems of an Industrial Civilisation*, Routledge & Kegan Paul Ltd.

12) Maslow, A. (1970). *Motivation and Personality*, 2nd edition, Harper & Row.

13) Herzberg, Mausner & Synderman, (1959). *The Motivation to Work*, 2nd edition, Wiley.

14) Jackson, M.C. (1990). *Human Resource Management, An MBA course manual*, The University of Hull.

15) Jackson, M.C. (1990). *Organisational Design & Behaviour, An MBA course manual*, The University of Hull.

16) Weiner, N. (1948). *Cybernetics or Control and Communication in the Animal and the Machine*, The Massachsetts Institute of Technology.

17) Jackson, M.C. (1991). *Systems Methodology for the Management Sciences*, Plenum, New York.

18) Ashby, W.R. (1956). *An Introduction to Cybernetics*, Chapman & Hall.

19) Beer, S. (1959). *Cybernetics and Management*, Wiley, New York.

20) Clemson, B. (1984). *Cybernetics: A New Management Tool*, Abacus, Tunbridge Wells.

21) Schoderbek, P.P., Schoderbek, C.G. & Kefalas, A.G. (1990). *Management Systems: Conceptual Considerations*, 4th edition, Business Publications, Dallas.

22) Robb, F.F. (1984). Cybernetics in Management Thinking, *Systems Research*, **1**, 5-23.

23) Waddington, C.H. (1977). *Tools for Thought*, Paladin, St. Albans

24) Beer, S. (1981). *Brain of the Firm*, 2nd edition, Wiley, Chichester.

25) Flood, R.L. & Zambuni, S. (1990). Viable Systems Diagnosis 1. Application with a major tourism services group, *Systems Practice*, **3**, 225-48, Plenum, New York.

26) Beer, S. (1966). *Decision and Control*, Wiley, Chichester.

27) Harrison, P.J. & Stevens, C.R. (1971). A Bayesian Approach to Short-Term Forecasting, *Operational Research Quarterly*, **22.** (Cited by Beer, 24).

28) Beer, S. (1989). National Government: Disseminated Regulation in Real Time, or 'How to run a country', *The Viable System Model: Interpretations and Applications of Stafford Beers VSM*, Espejo, R. & Harnden, R., Wiley, Chichester.

29) Espejo, R. (1990). Complexity and Change: Reflections upon the Cybernetic Intervention in Chile, 1970 - 1973, *Systems Practice*, **3**, 303-13, Plenum, New York.

30) Machiavelli, N. (1961). *The Prince*, Translated by George Bull, Penguin.

31) Ulrich, W. (1981). A Critique of Pure Cybernetic Reason: The Chilean Experience with Cybernetics, *Journal of Applied Systems Analysis*, **8**, 33-59.

32) Beer, S. (1989). The Evolution of a Management Cybernetics Process, *The Viable System Model: Interpretations and Applications of Stafford Beers VSM*, Espejo, R. & Harnden, R., Wiley, Chichester.

33) Ackoff, R. L. (1981). *Creating the Corporate Future*, Wiley, New York.

34) Espejo, R. (1989). P.M. Manufacturers: the VSM as a diagnostic tool, *The Viable System Model: Interpretations and Applications of Stafford Beers VSM*, Espejo, R. & Harnden, R., Wiley, Chichester.

35) Beckford, J. (1992). Passing on a Family Business, or a Family Business Passing on? An Application of the Viable System Model. *Systems Practice*, **5**, 543-60, Plenum, New York.

36) Espejo, R. (1983). Management and Information: The Complementarity Control-Autonomy, *Cybernetics and Systems: An International Journal*, **14**, 85-102.

37) Schuhmann, W. (1990). Strategy for Information Systems in the Film Division of Hoechst AG, *Systems Practice*, **3**, 265-87, Plenum, New York.

38) Latin, R.V. (1991). Cybernetics and Network Management (Viable Systems Modelling), *Systems Practice*, **4**, 339-60, Plenum, New York.

39) Foss, R.A. (1989). The Organisation of a Fortress Factory, *The Viable System Model: Interpretations and Applications of Stafford Beers VSM*, Espejo, R. & Harnden, R., Wiley, Chichester.

40) Britton, G.A. & McCallion, H. (1989). Application of the VSM to the Trade Training Network in New Zealand, *The Viable System Model: Interpretations and Applications of Stafford Beers VSM*, Espejo, R. & Harnden, R., Wiley, Chichester.

41) Leonard, A. (1989). Application of the VSM to Commercial Broadcasting in the United States, *The Viable System Model: Interpretations and Applications of Stafford Beers VSM*, Espejo, R. & Harnden, R., Wiley, Chichester.

42) Holmberg, B. A. (1989). Developing Organisational Competence in a Business, *The Viable System Model: Interpretations and Applications of Stafford Beers VSM*, Espejo, R. & Harnden, R., Wiley, Chichester.

43) Ben-Eli, M. U. (1989). Strategic Planning and Management Reorganisation at an Academic Medical Centre: use of the VSM in guiding diagnosis and design, *The Viable System Model: Interpretations and Applications of Stafford Beers VSM*, Espejo, R. & Harnden, R., Wiley, Chichester.

44) Walker, J. (1990). Diagnosis and Implementation: How a Large Cooperative Employed a Series of Proposals for Restructuring Based upon the Viable Systems Model, *Systems Practice*, **3**, 441-51. Plenum, New York.

45) Espejo, R. (1989). A Cybernetic Method to Study Organisations, *The Viable System Model: Interpretations and Applications of Stafford Beers VSM*, Espejo, R. & Harnden, R., Wiley, Chichester.

46) Espejo, R. & Harnden, R. (1989). The VSM: an Ongoing Conversation ..., *The Viable System Model: Interpretations and Applications of Stafford Beers VSM*, Espejo, R. & Harnden, R., Wiley, Chichester.

47) Checkland, P. (1981). *Systems Thinking, Systems Practice*, Wiley, Chichester.

48) Britton, G. A., (1989). A Methodology for Using Beer's Viable System Model, *Cybernetics and Systems: An International Journal*, **20**, 249-64, Hemisphere.

49) Harnden, R. (1989). Outside and then: an Interpretive Approach to the VSM, *The Viable System Model: Interpretations and Applications of Stafford Beers VSM*, Espejo, R. & Harnden, R., Wiley, Chichester.

50) Harnden, R. (1990). The Languaging of Models: The Understanding and Communication of Models with Particular Reference to Stafford Beer's Cybernetic Model of Organisation Structure, *Systems Practice*, **3**, 289-302, Plenum, New York.

51) Schwaninger, M. (1990). Embodiments of Organisational Fitness: The Viable System Model (VSM) as a Guide. *Systems Practice*, **3**, 249-64. Plenum, New York.

52) Espejo, R & Schwaninger, M. (eds.) (1993). *Organisational Fitness, Corporate Effectiveness through Management Cybernetics*. Campus Verlag, Frankfurt & New York.

53) Espejo, R. (1993). Management of Complexity in Problem Solving, *Organisational Fitness, Corporate Effectiveness through Management Cybernetics*. (eds. Espejo, R. & Schwaninger, M.), Campus Verlag, Frankfurt & New York.

54) Malik, F. (1993). Understanding a Knowledge Organisation as a Viable System, *Organisational Fitness, Corporate Effectiveness through Management Cybernetics*. (eds. Espejo, R. & Schwaninger, M.), Campus Verlag, Frankfurt & New York.

55) Flood, R.L. (1992). Viability: what Quality Management lacks. *Transactions of the Institute of Measurement and Control*, **14**.

56) Flood, R.L. (1993), *Beyond TQM*, Wiley, Chichester.

57) Flood, R.L. (1993). Viability: what Quality Management lacks. *Organisational Fitness, Corporate Effectiveness through Management Cybernetics*. (eds. Espejo, R. & Schwaninger, M.), Campus Verlag, Frankfurt & New York.

58) Gomez, P. (1993). Organising for Autonomy. *Organisational Fitness, Corporate Effectiveness through Management Cybernetics*. (eds. Espejo, R. & Schwaninger, M.), Campus Verlag, Frankfurt & New York.

59) Semler, R. (1993). Managing without Managers: An Unorthodox Approach to Coping with Complexity. *Organisational Fitness, Corporate Effectiveness through Management Cybernetics*. (eds. Espejo, R. & Schwaninger, M.), Campus Verlag, Frankfurt & New York.

60) Gottfreund, G. (1993). Cybernetic Management: The Example of the Karlsberg Group. *Organisational Fitness, Corporate Effectiveness through Management Cybernetics*. (eds. Espejo, R. & Schwaninger, M.), Campus Verlag, Frankfurt & New York.

61) Seara, A. C. (1993). The Viable System Model (VSM) at MBR. *Organisational Fitness, Corporate Effectiveness through Management Cybernetics*. (eds. Espejo, R. & Schwaninger, M.), Campus Verlag, Frankfurt & New York.

62) Bowling, D. & Espejo, R. (1993). An Intervention with the Cybernetic Methodology in Regent Engineering. *Organisational Fitness, Corporate Effectiveness through Management Cybernetics*. (eds. Espejo, R. & Schwaninger, M.), Campus Verlag, Frankfurt & New York.

63) Britton, G. A. & Parker, J. (1993). An Explication of the Viable System Model for Project Management. *Systems Practice*, **6**, 21-51, Plenum, New York.

64) Jackson, M. C. (1986). The Cybernetic Model of the Organisation: An assessment, *Cybernetics and Systems: An International Journal*.

65) Jackson, M. C. (1988). An Appreciation of Stafford Beer's "Viable System" Viewpoint on Managerial Practice, *Journal of Management Studies*, **25**, 6.

66) Flood, R. L. & Jackson, M.C. (1988). Cybernetics and Organisation Theory: A Critical Review. *Cybernetics and Systems: An International Journal*, **19**, 13-33.

67) Morgan, G. (1982). Cybernetics and Organisation Theory: Epistemology or Technique? *Human Relations*, **35**, 521-37.

68) Morgan, G. (1986). *Images of Organisations*, Sage, London.

69) Beer, S. (1974). *Designing Freedom*, Canadian Boadcasting Corporation, Toronto.

70) Tucker, B. Instead of a Book, cited in, *Corporate Strategy*, Igor Ansoff. (1987). Penguin, Revised Edition.

71) Jackson, M. C. (1992). The Soul of the Viable System Model, A Research Note. *Systems Practice*, **5**, 561-64, Plenum, New York.

72) Russell, B. (1961). *A History of Western Philosophy*, 2nd edition, Allen & Unwin.

73) Beer, S. (1990). Recursion Zero - Metamanagement. *Systems Practice*, **3**, 315-26, Plenum, New York.

74) Beer, S. (1990). On Suicidal Rabbits: A Relativity of Systems, *Systems Practice*, **3**, 115-124, Plenum, New York.

75) Schecter, D. (1991). Beer's "Organisational Tensegrity" and the Challenge of Democratic Management. *Systems Practice*, **4**, 303-17, Plenum, New York.

76) Schecter, D. (1993). Beer's "Team Syntegrity" and the Challenge of Democratic Management. *Organisational Fitness, Corporate Effectiveness through Management Cybernetics*. (eds. Espejo, R. & Schwaninger, M.), Campus Verlag, Frankfurt & New York.

77) Beer, S. (1993). *World in Torment, A Time Whose Idea Must Come*. Presidential Address to Triennial Conference of the World Organisation of Systems & Cybernetics, New Delhi, India.

78) Motor Trader, Reed Business Publishing, 24th May 1993.

79) Motor Trader, Reed Business Publishing, 7th June 1993.

80) Beer, S. (1989). "I Am the Emperor - and I Want Dumplings," *Systems Practice*, **2**, 267-85, Plenum, New York.

81) Peters, T.J. & Waterman, R.H. (1982). *In Search of Excellence*, Harper Collins, New York.

82) Pask, G. (1975). *The Cybernetics of Human Learning and Performance*, Hutchison, London.

83) Fairbairn, Sir Nicholas, (29/6/93). The Day that Britain's Decline Really Began, *Daily Mail*. London.

Bibliography

Beer, S. (1975). *Platform for Change*, Wiley, Chichester.

Heller, R. (1989). *The Making of Managers*, Penguin, London.

Heller, R. (1991). *Culture Shock*, Coronet, London.

Parkinson, C. Northcote. (1957). *Parkinson's Law or the Pursuit of Progress*, Penguin, London.

Parkinson, C. Northcote. (1963). *The Law and The Profits*, Murray, London.

Dickinson, G. Lowes. (1947). *Plato and His Dialogues*, Pelican, London.

Stewart, R. (1986). *The Reality of Management*, 3rd Edition, Pan, London.

Smith, C.S. (1969). *Quality and Reliability - An Integrated Approach*, Pitman, London.

Pollard, W.E. (1986). *Bayesian Statistics for Evaluation Research*, Sage, California.

Hannagan, T.J. (1986). *Mastering Statistics*, 2nd Edition, Macmillan, London.

Porter, A. (1970). *Cybernetics Simplified*, 2nd Edition, Barnes & Noble, New York.

Meyers, G.C. & Holusha, J. (1988). *Managing Crisis - A Positive Approach*, Unwin Hyman, London.

Handy, C.B. (1990). *The Age of Unreason*, Arrow, London.

Handy, C.B. (1985). *Understanding Organisations*, 3rd Edition, Penguin, London.

Handy, C.B. (1992). *Waiting for the Mountain to Move*, Arrow, London.

Handy, C.B. (1990). *Inside Organisations*, BBC Books, London.

Handy, C.B. (1985). *The Future of Work*, Blackwell, Oxford.

Drucker, P. (1986). *Innovation and Entrepreneurship, Practice and Principles*, 2nd Edition, Pan, London.

Drucker, P. (1989). *The Practice of Management*, Paperback Edition, Heinemann, London.

West, A. (1988). *A Business Plan*, Longman, London.

Burns, P. & Dewhurst, J. (eds) (1989). *Small Business and Entrepreneurship*, Macmillan, London.

Townsend, R. (1985). *Further up the Organisation*, Coronet, London.

Carter, R. et al. (1984). *Systems, Management and Change - a graphic guide*, Chapman, London.

Wilson, B. (1990). *Systems: Concepts, Methodologies and Applications*, 2nd Edition, Wiley, Chichester.

Taylor, B. & Hussey, D. (1982). *The Realities of Planning*, Pergamon, Oxford.

Pugh, D.S. & Hickson, D.J. (1989). *Writers on Organisations*, Penguin, London.

Potter, S. (1962). *Supermanship*, Penguin, London.

Singleton, W.T. (1974). *Man-Machine Systems*, Penguin, London.

Buzan, T. (1982). *Use Your Head*, 2nd Edition, British Broadcasting Corporation, London.

Jay, A. (1987). *Management and Machiavelli*, 2nd Edition, Century Hutchinson, London.

Moore, P.G. (1986). *Basic Operational Research*, 3rd Edition, Pitman, London.

Frost, P.J. et al. (1985). *Organizational Culture*, Sage, California.

Schein, E.H. (1969). *Process Consultation: its Role in Organization Development*, Addison-Wesley, Reading, Massachusetts.

Schein, E.H. (1988). *Organizational Psychology*, 3rd Edition, Prentice Hall, New Jersey.

Clutterbuck, D. & Crainer, S. (1990). *Makers of Management*, Macmillan, London.

Goldratt, E.H. & Cox, J. (1989). *The Goal*, Revised Edition, Gower, Aldershot, England.

Makridakis, S. & Wheelwright, S.C. (1989). *Forecasting Methods for Management*, 5th Edition, Wiley, Chichester.

Jackson, M.C. & Keys, P. (1987). *New Directions in Management Science*, Gower, Aldershot, England.

Barney, J.B. & Griffin, R.W. (1992). *The Management of Organisations*, Houghton Mifflin, Boston, Massachusetts.

Lipsey, R.G. (1975). *An Introduction to Positive Economics*, 4th Edition, Wiedenfeld & Nicolson, London.

Stacey, R.D. (1993). *Strategic Management and Organisational Dynamics*, Pitman, London.

Duerr, C. (1971). *Management Kinetics*, McGraw-Hill, Maidenhead, U.K..

Porter, M.E. (1980). *Competitive Strategy: Techniques for Analysing Industries and Competitors*, The Free Press, Macmillan, New York.

Boisot, M. (1987). *Information & Organisations: The Manager as Anthropologist*, Fontana, London.

Flynn, N. (1993). *Public Sector Management*, 2nd. Edition, Harvester Wheatsheaf, Hertfordshire.

Journals

Systems Practice, Plenum, New York.

Entrepreneurship, Innovation and Change, Plenum, New York.

Automotive Management, A Leading Edge Publication.

Management Services, Journal of the Institute of Management Services, London.

Transactions of the Institute of Measurement and Control, Institute of Measurement and Control, London.

Where Workers Manage Themselves (Article). World Executive Digest, October 1992.

The Financial Times, London.